realspace®

3-Shelf
Storage Cabinet

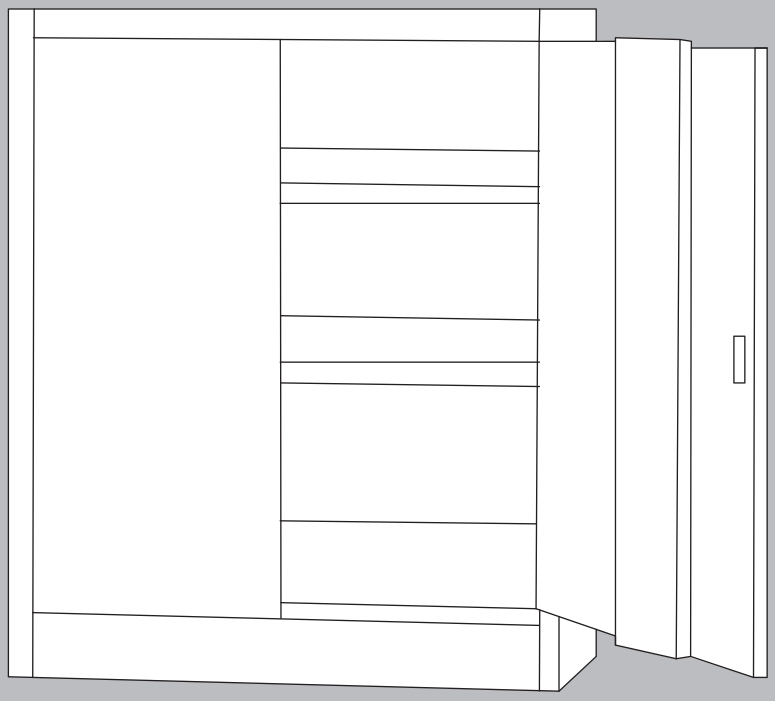

3-Shelf Storage Cabinet
Assembly instructions and warranty information

3-Armoires de Stockage à Tablettes
Instructions pour l'assemblage et information sur la garantie

Gabinete de Almacenamiento con 3 Repisas
Instrucciones para el ensamblaje e información sobre la garantía

Date Manufactured / Date de fabrication / Fecha de manufactura: _____

Lot # / Nombre de sort / Número de lote: _____

version 0515

Item 577-145 / 24877484, 369-294 / 24877466

Realspace is a registered trademark of The Office Club, Inc.
© 2015 Office Depot, Inc. All Rights Reserved.

⚠ Warning

Please use your furniture correctly and safely. Improper use can cause safety hazards, or damage to your furniture or household items. *Carefully read the following chart.*

Look out for:	What can happen:	How to avoid:
Children climbing on furniture. A child may try to reach a toy or other object by climbing on furniture. Children will play and be active near a TV.	Risk of injury or death. A child climbing on a piece of furniture or playing with a TV can cause it to tip over.	Never allow children to climb on or play with furniture. Do not place toys, food, etc. on the top shelves and/or drawers. Children may try to climb to reach them out of curiosity.
Overloaded drawers and/or shelves. Improper loading can cause furniture to be top-heavy.	Risk of injury or damage to furniture and/or equipment. Overloaded drawers and/or shelves can break.	Refer to your assembly manual for maximum weight capacities. Load drawers and shelves from the bottom to the top. Place heavier items in lower drawers and/or shelves. Unload drawers and shelves from the top to the bottom before moving the furniture.
Placing a TV on furniture that is not designed to support a TV.	Risk of injury or death. TVs can be very heavy. The weight and location of the picture tube tends to make them unbalanced and prone to tipping forward.	This product is not designed to support a TV.
Improperly moving furniture.	Risk of injury or damage to furniture and/or equipment. Furniture can tip over if not moved carefully over obstacles or across a changing floor surface (ex: from a wood floor to carpeted floor).	Do not push furniture, especially on carpeted floor. Have someone help you lift the item and place it in its new location. Remove any glass tops, shelves or doors before moving.

Thank you for purchasing this product. We trust that you will be completely satisfied with your product for years to come. This product is backed by a 5 year limited warranty and has been crafted with today's lifestyles in mind.

Call Us First!
DO NOT RETURN TO STORE.
For immediate help with assembly or product information call our toll-free number:
1-800-264-3453 Mon-Fri 7am to 5pm EST.
Our staff is ready to provide assistance.
Damaged or missing parts ship from our facility in 1-2 business days.

The maximum recommended weight allowance is 175 lbs (79.5 kg) per shelf.
Lot # is located inside the top panel.
Please record it in space below for future reference. Record date of purchase below and save this booklet for future reference. Call for parts & service 1-800-264-3453 . For customer support, Vendor sticker can be found inside the top panel.

SPECIAL NOTE: Please read the instruction sheets completely before assembly. Examine all packaging material before discarding carton. Remove any remaining staples from the carton before discarding. Select a smooth work surface which will not scratch or damage parts. Remove all parts from carton and separate into groups as indicated on parts list. Please ensure all parts are included prior to assembly. Use of power tools to complete assembly is not recommended.

Customer Service 1-800-264-3453

Date Purchased: _____

PARTS LIST LISTE DES PIÈCES LISTA DE PIEZAS

	Name Nom Nombre	Part Pièce Pieza	Qty Qté Cantidad
A	Left Hand Back	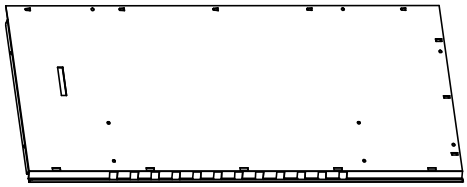	1
B	Right Hand Back	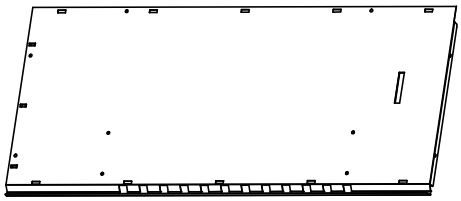	1
C	Left Hand Side	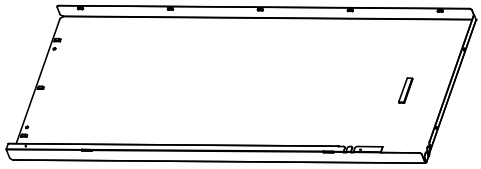	1
D	Right Hand Side	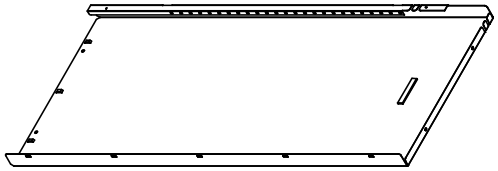	1
E	Left Hand Door	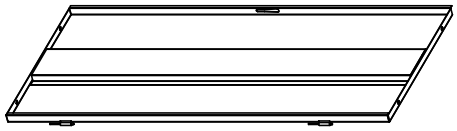	1
F	Right Hand Door	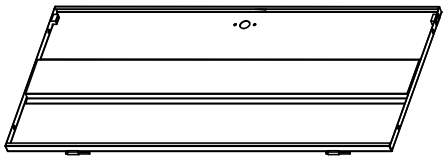	1
G	Door Rods	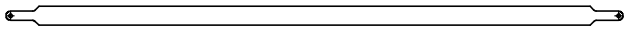	2

PARTS LIST LISTE DES PIÈCES LISTA DE PIEZAS

Name Nom Nombre		Part Pièce Pieza	Qty Qté Cantidad
H	Top	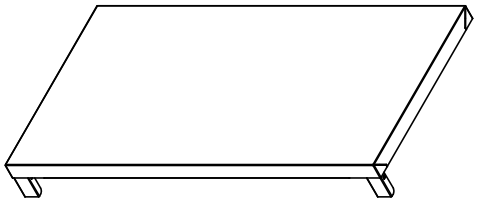	1
I	Bottom	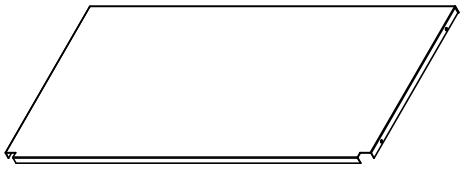	1
J	Shelves		4
K	Kick Plate	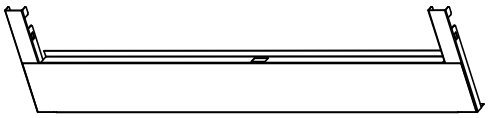	1
L	Handle	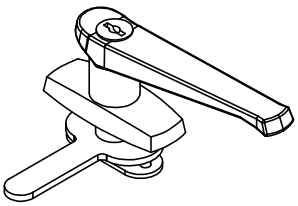	1
M	Shelf Clips	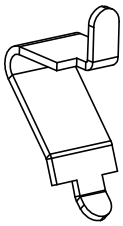	8
N	Anchor Hardware	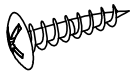	2 (IF SUPPLIED)

Step 1 - Back Assembly

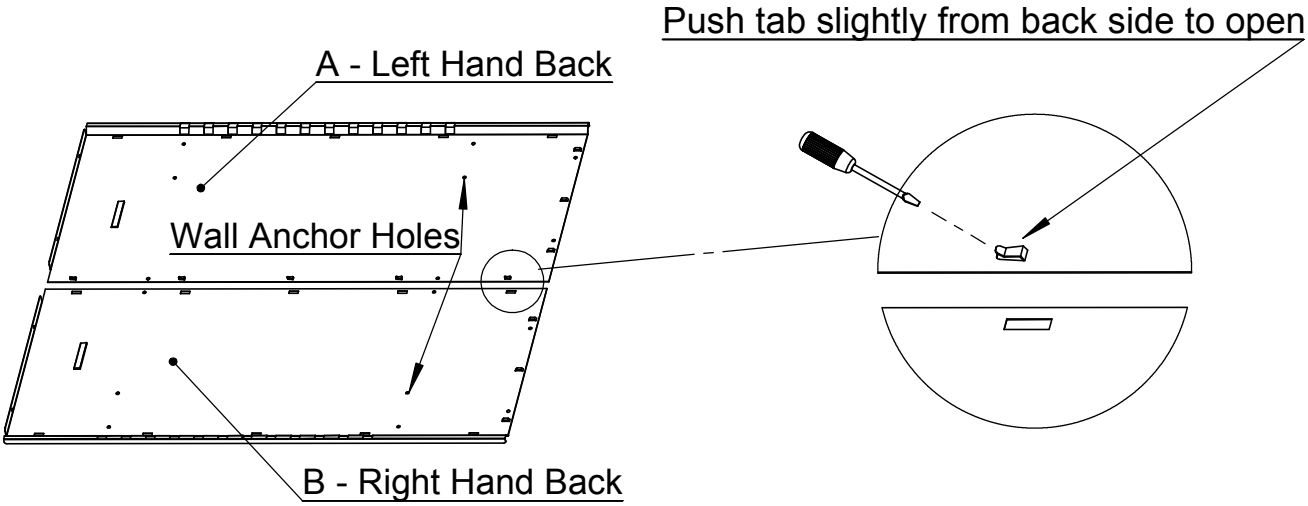

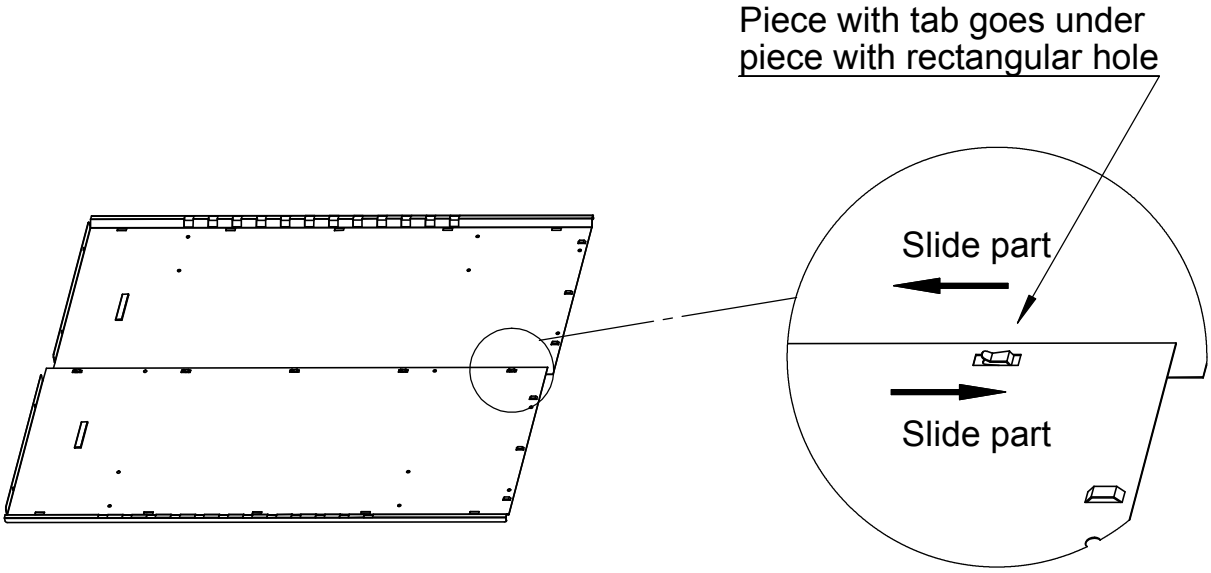

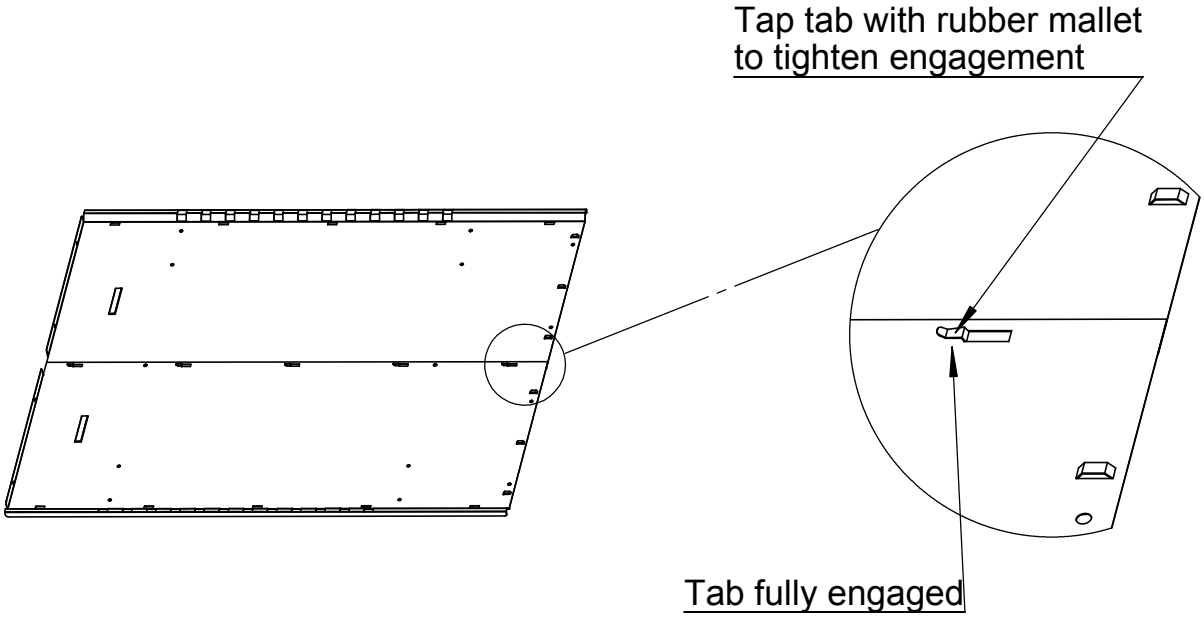

Step 2 - Side Assembly

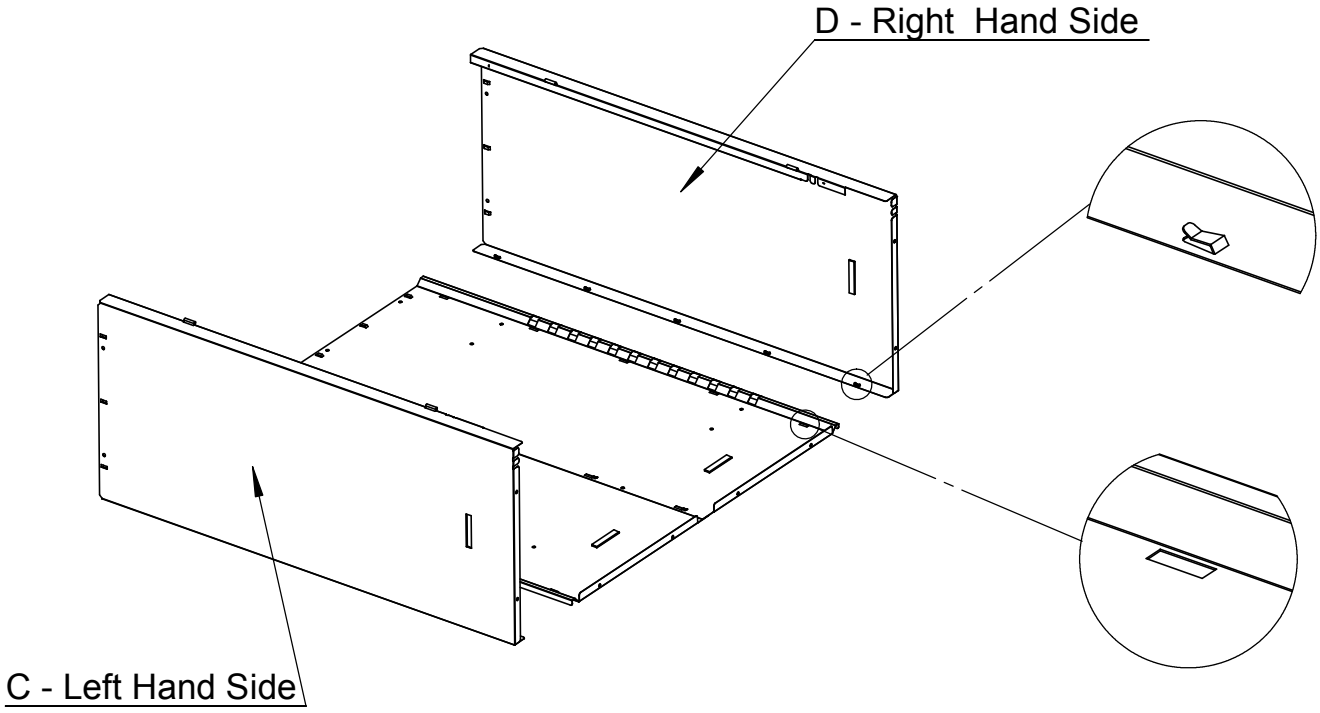

Installation method same as "Step 1"

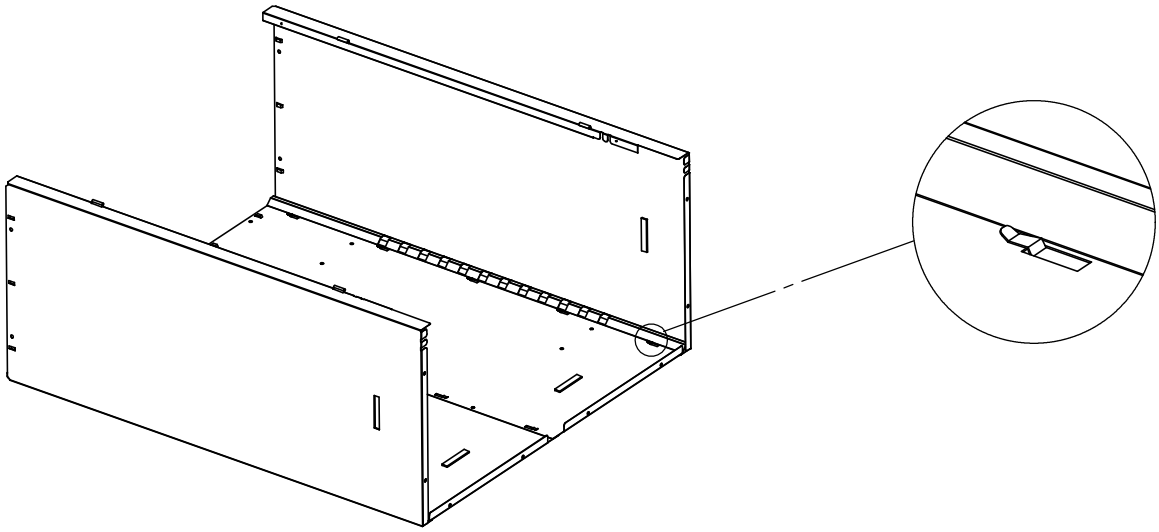

Installation method same as "Step 1"

Step 3 - Bottom Assembly

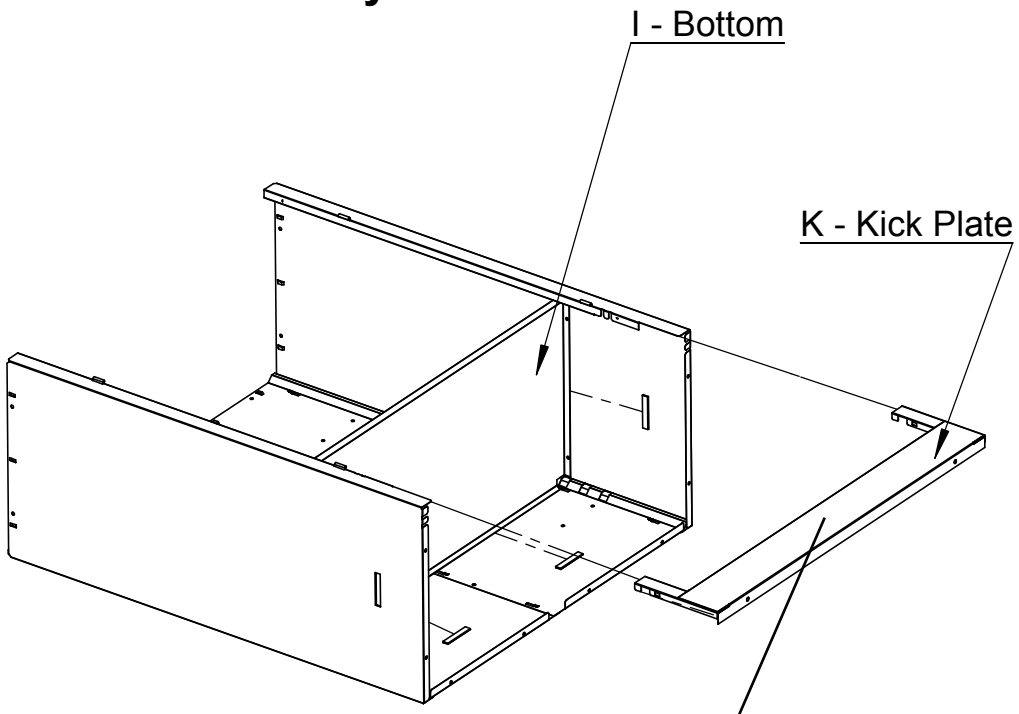

The kick plate must be installed before the bottom can be put in place

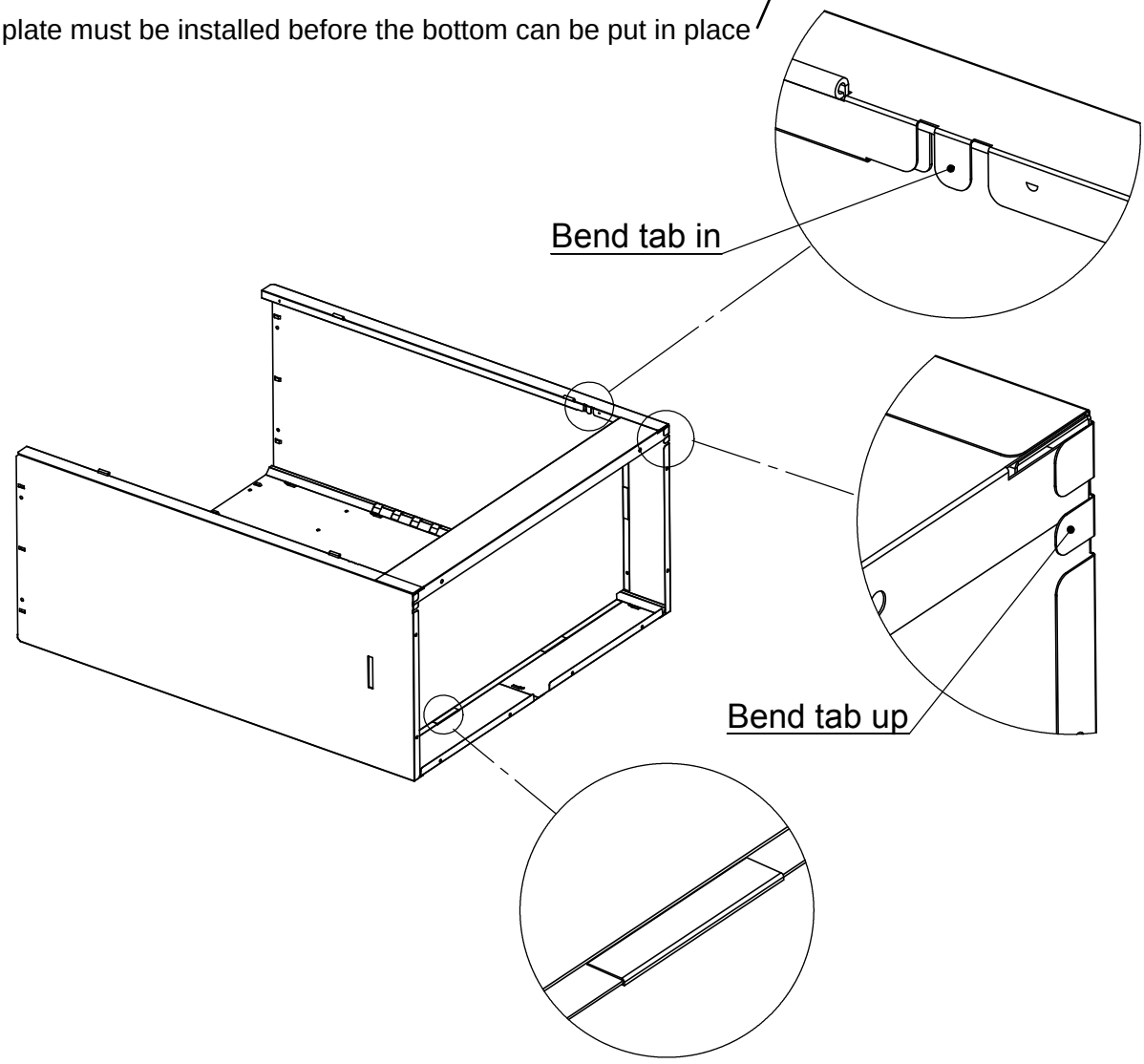

Step 4 - Top Assembly

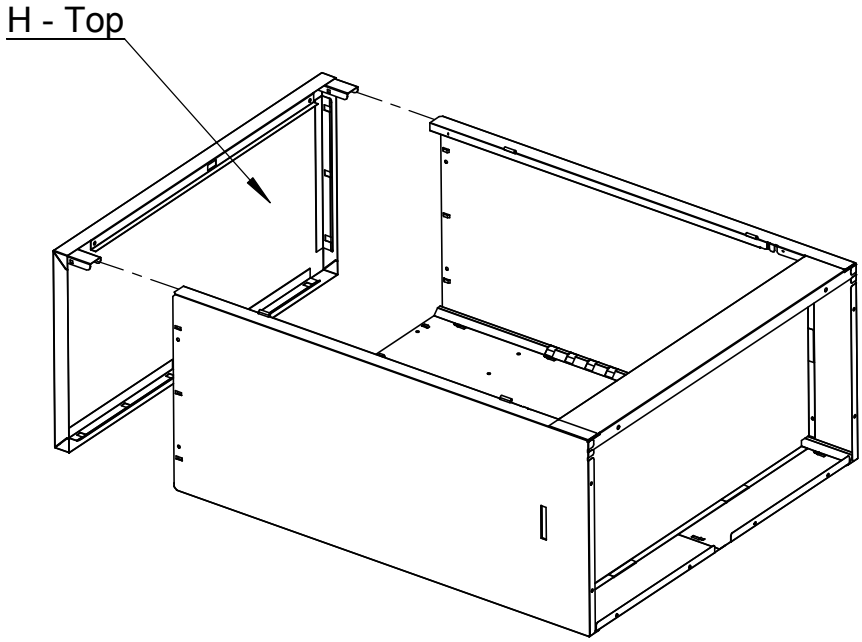

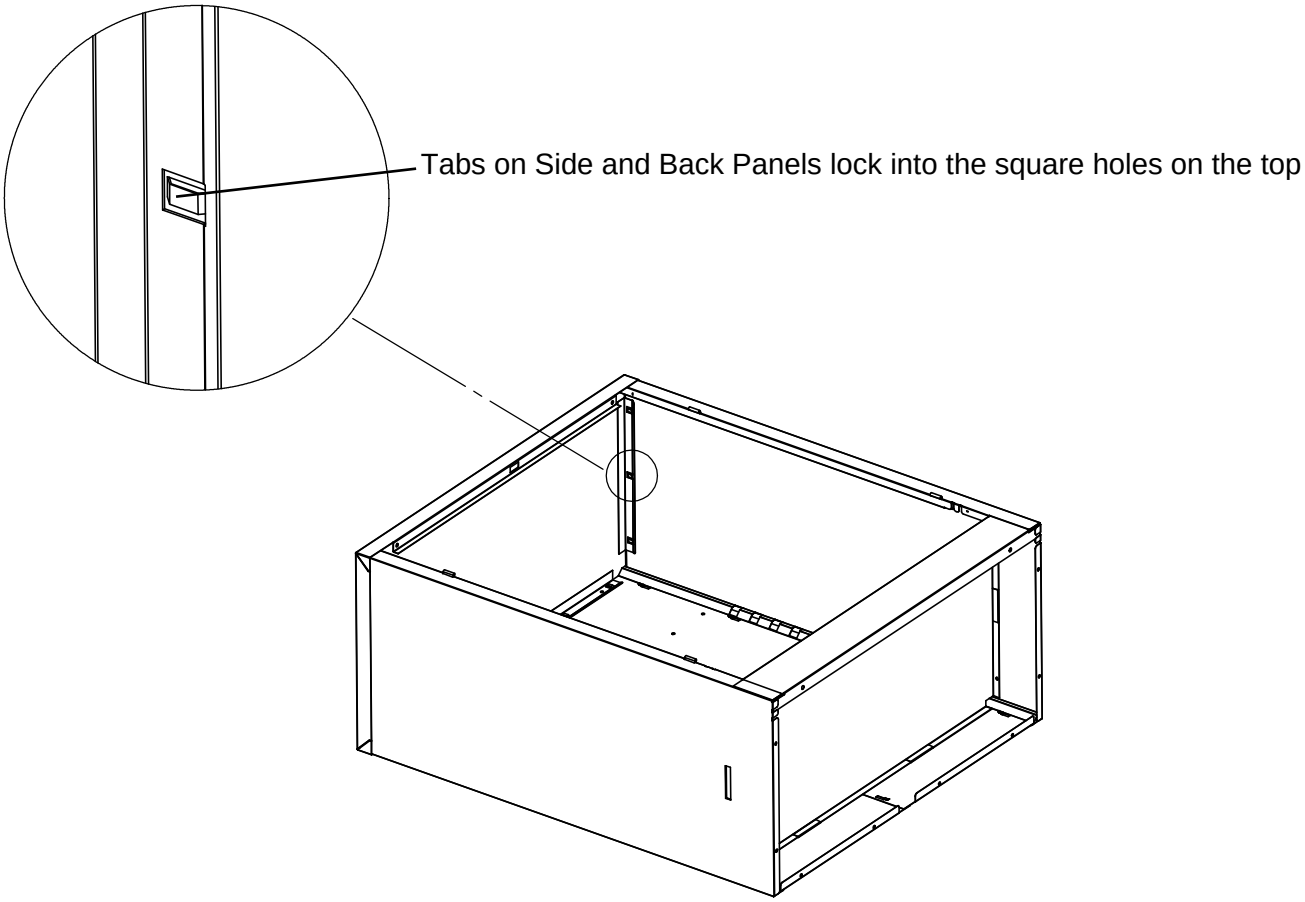

Step 5 - Door Assembly

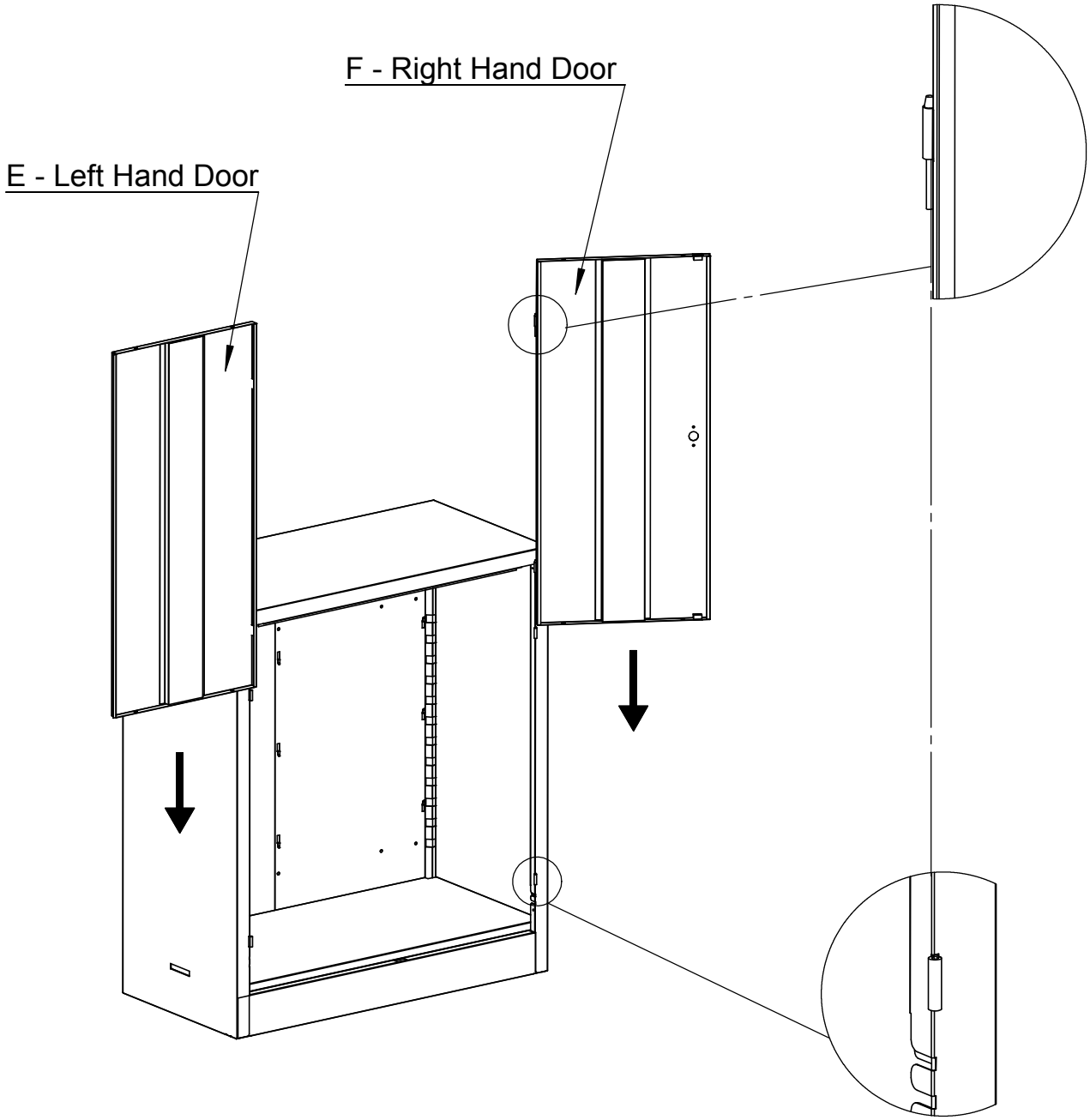

Step 6 - Shelf & lock Assembly

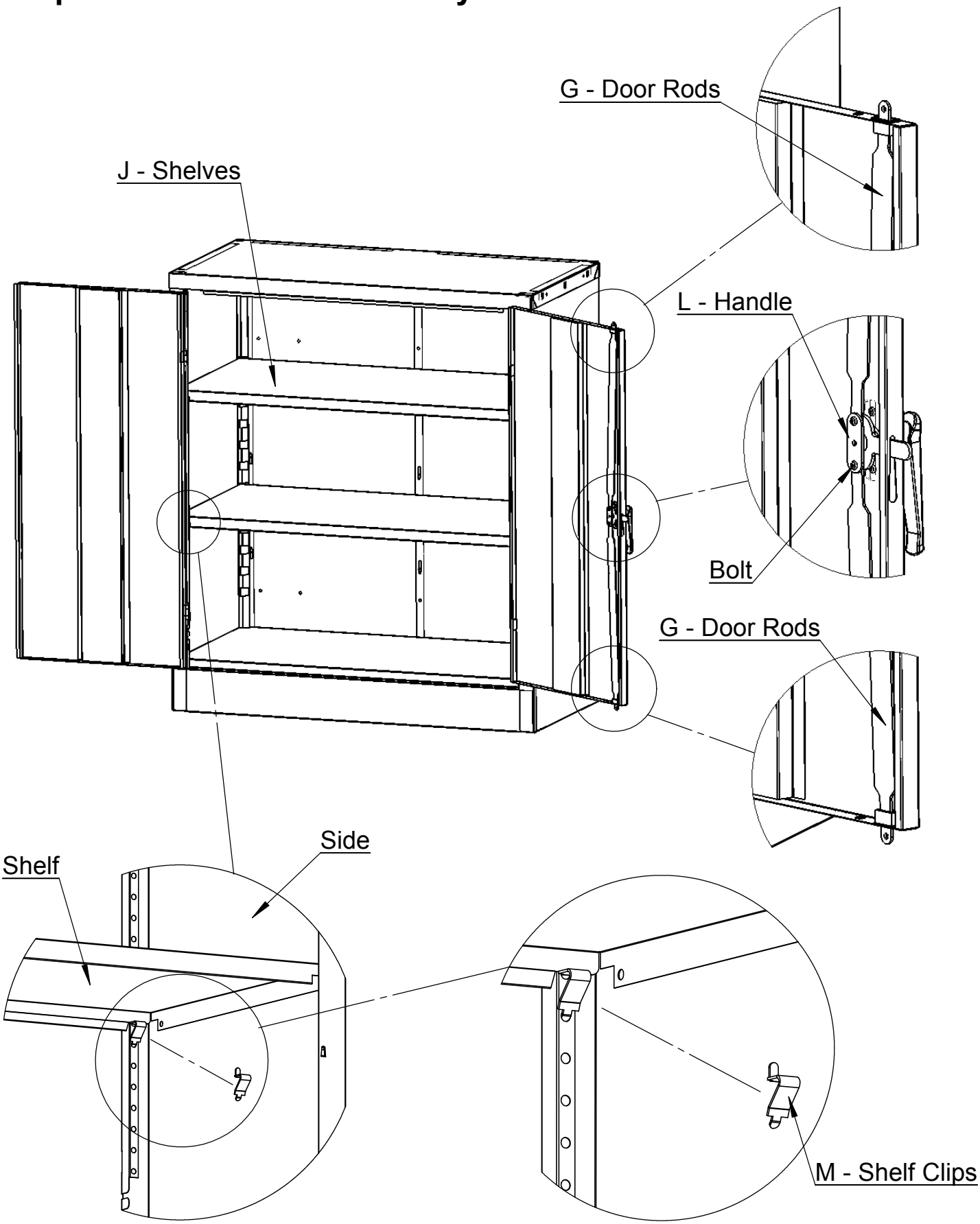

Step 7 - Final Assembly (If need)

This product is designed for stationary use only.
Do not use it with any type of mobile cabinet conversion device.

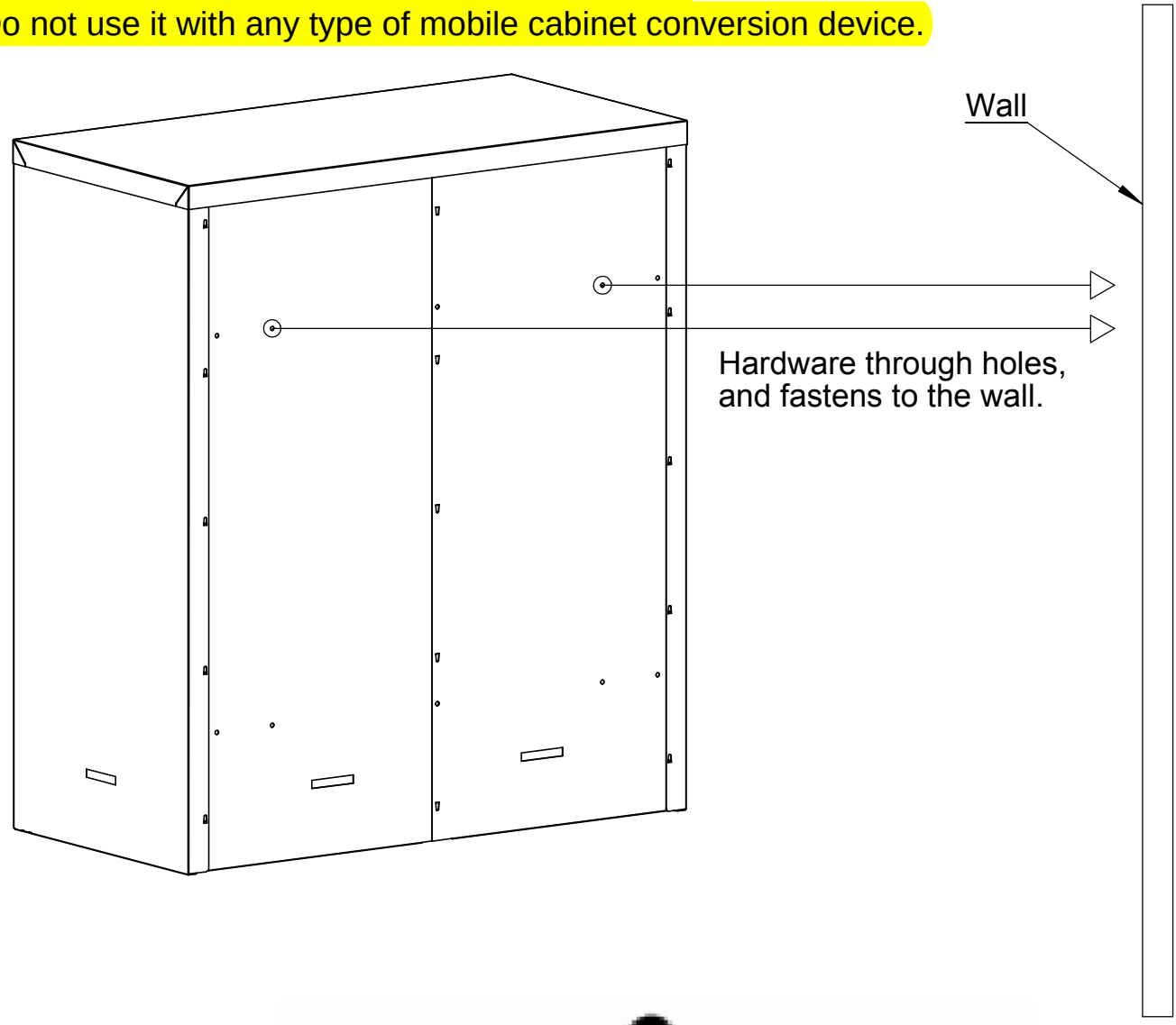

Swinton Avenue Trading Ltd., Inc. Limited Five Year Product Warranty

This limited warranty covers the original purchase of new product used for normal commercial, personal or household use. Swinton Avenue Trading, Inc. (SAT) warrants its products will be free from defects in materials and workmanship (normal wear and tear excepted), for five (5) years from the date of purchase, except as provided below. SAT, at its option, will replace with a comparable product, free of charge, any product purchased from it that fails under normal use as a result of such defect. This warranty does not apply to damage caused by fire, accident, negligence, misuse, use other than as stated in product instructions, improper cleaning or other circumstances not directly attributable to defects in materials and workmanship.

Natural variations occurring in wood or other materials will not be considered defects, and SAT does not warrant the color-fastness or matching of colors, grains, or textures of such materials. This warranty does not apply to: modifications of the product, attachments to the product not approved by SAT, and products that were not installed, used, or maintained in accordance with product instructions and warnings.

This warranty has the following exceptions: Fabrics, foam, veneer finishes and other covering materials are warranted for three years from date of purchase.

Proof of purchase is required in the form of a receipt (copy or original) to validate warranty. Warranty claims without the receipt may be rejected.

If Swinton Avenue Trading, Inc. chooses to provide a refund for such product, it will be fulfilled in the form of an Office Depot Merchandise card. Claims fulfilled in this manner take approximately 30 days to process.

SAT PROVIDES THIS LIMITED WARRANTY IN LIEU OF ALL OTHER WARRANTIES EITHER EXPRESSED OR IMPLIED. EXPRESSLY EXCLUDED ARE ALL WARRANTIES OF FITNESS FOR A PARTICULAR PURPOSE OR MERCHANTABILITY. OFFICE DEPOT'S SOLE OBLIGATION AND THE USER'S EXCLUSIVE REMEDY UNDER THIS WARRANTY SHALL BE LIMITED TO THE REPAIR, REFUND (IN THE FORM OF AN OFFICE DEPOT MERCHANDISE CARD) OR REPLACEMENT AT SAT'S SOLE DISCRETION AND COST, OF PRODUCT OR COMPONENTS.

IN NO EVENT SHALL SAT, ITS AFFILIATES, SUBSIDIARIES OR PARENT COMPANIES BE RESPONSIBLE FOR CONSEQUENTIAL, SPECIAL, OR INCIDENTAL DAMAGES ARISING OUT OF A CLAIM OF DEFECTIVE PRODUCT EVEN IF SAT HAS BEEN ADVISED OF THE POSSIBILITY OF SUCH DAMAGES.

SOME STATES OR PROVINCES DO NOT ALLOW THE EXCLUSION OF IMPLIED WARRANTIES OR LIMITATIONS ON HOW LONG AN IMPLIED WARRANTY LASTS OR THE EXCLUSION OR LIMITATION OF INCIDENTIAL OR CONSEQUENTIAL DAMAGES SO THE ABOVE LIMITATIONS MAY NOT APPLY TO YOU. THIS WARRANTY GIVES YOU SPECIFIC LEGAL RIGHTS, AND YOU MAY ALSO HAVE OTHER RIGHTS WHICH MAY VARY BY STATE OR PROVINCE.

THIS WARRANTY APPLIES ONLY TO THE U.S. AND CANADA.

Service Instructions

Please call: 1-800-264-3453 for warranty service.