215.90 mm
8.50 in

279.40 mm
11.00 in

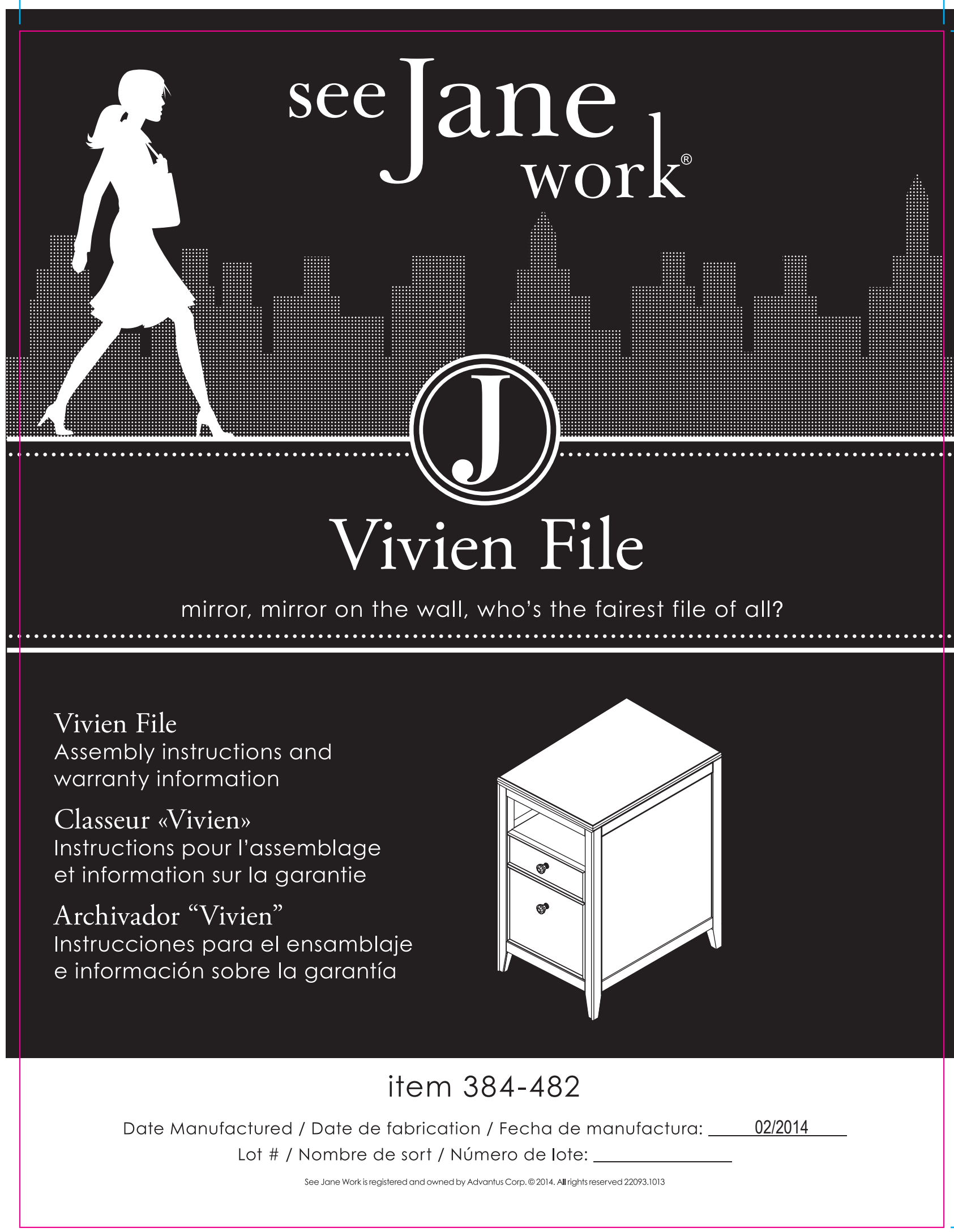


item 384-482

Date Manufactured / Date de fabrication / Fecha de manufactura: 02/2014

Lot # / Nombre de sort / Número de lote: _____

See Jane Work is registered and owned by Advantus Corp. © 2014. All rights reserved 22093.1013

OUTPUT AT 100% OF ACTUAL SIZE

Job # / Name: 22106 SJW Collection 2014
File Name: 22106_s6_384482_vvn_fl_man_cvr

■ DI ☐ Dom | ■ R&D ☐ Contract | Dept #: 1

Source/Vendor: ODC / Homestar Northamerica

Dieline Name: 8.5 in x 11 in
☐ Vendor Supplied ■ Created by OD

Package Type: manual cover

Office DEPOT
Own Brand 6600 N. Military Trl, Boca Raton, FL 33496

Release Artist: tc
Release Date: 01.23.14

**PRODUCTION** [X] **Final**

| Round: | Date: | Artist: | Mockups |
|---|---|---|---|
| 1 | 10.16.13 | ud | N |
| 1 | 10.17.13 | ud | N |
| 2 | 11.20.13 | tc | N |
| 2 | 01.06.14 | AV | N |
| 3 | 01.20.14 | tc | N |
| | | | |
| | | | |
| | | | |

Colors/Finishes:

BLACK

| CREATIVE | INITIAL | DATE |
|---|---|---|
| Graphic Designer | | |
| Design Mgr. | | |
| Design Dir. | | |
| Program Mgr. | | |
| Proofreader | | |
| Copywriter | | |
| Production Mgr. | | |

| MERCHANT TEAM | | INITIAL | DATE |
|---|---|---|---|
| Sourcing: | XXXXXXXXX | | |
| R & D: | Eric Johnson | | |
| Contract: | XXXXXXXXX | | |

| QA | INITIAL | DATE |
|---|---|---|
| Quality Assurance: | | |

**CONFIDENTIAL**

This document is the property of Office Depot®. Its contents may not be shared or distributed to third parties without the written consent of Office Depot or its authorized representatives.

8.5”

11”

## ⚠ Warning

**Please use your furniture correctly and safely. Improper use can cause safety hazards, or damage to your furniture or household items. *Carefully read the following chart.***

| Look out for: | What can happen: | How to avoid: |
|---|---|---|
| Children climbing on furniture. A child may try to reach a toy or other object by climbing on furniture. Children will play and be active near a TV. | Risk of injury or death. A child climbing on a piece of furniture or playing with a TV can cause it to tip over. | Never allow children to climb on or play with furniture. Do not place toys, food, etc. on the top shelves and/or drawers. Children may try to climb to reach them out of curiosity. |
| Overloaded drawers and/or shelves. Improper loading can cause furniture to be top-heavy. | Risk of injury or damage to furniture and/or equipment. Overloaded drawers and/or shelves can break. | Refer to your assembly manual for maximum weight capacities. Load drawers and shelves from the bottom to the top. Place heavier items in lower drawers and/or shelves. Unload drawers and shelves from the top to the bottom before moving the furniture. |
| Placing a TV on furniture that is not designed to support a TV. | Risk of injury or death. TVs can be very heavy. The weight and location of the picture tube tends to make them unbalanced and prone to tipping forward. | This product is not designed to support a TV. |
| Improperly moving furniture. | Risk of injury or damage to furniture and/or equipment. Furniture can tip over if not moved carefully over obstacles or across a changing floor surface (ex: from a wood floor to carpeted floor). | Do not push furniture, especially on carpeted floor. Have someone help you lift the item and place it in its new location. Remove any glass tops, shelves or doors before moving. |

Thank you for purchasing this product. We trust that you will be completely satisfied with your product for years to come. This product is backed by a 5 year limited warranty and has been crafted with today’s lifestyles in mind.

**Call Us First!**
**DO NOT RETURN TO STORE.**
For immediate help with assembly or product information call our toll-free number:
1-800-949-9974 Mon-Fri 8am to 8pm EST.
Our staff is ready to provide assistance.
Damaged or missing parts ship from our facility in 1-2 business days.

**The maximum recommended weight allowance is 140lbs(63.7kg) for top surface.**
**The maximum recommended weight allowance is 7.39 lbs (3.36kg) for small drawer and 20 lbs (9.1kg) for big drawer.**

Lot # is located on a side panel. Please record it in space below for future reference. Record date of purchase below and save this booklet for future reference. Call for parts & service 1-800-949-9974. For customer support, Vendor sticker can be found on the back panel.

**SPECIAL NOTE:** Please read the instruction sheets completely before assembly. Examine all packaging material before discarding carton. Remove any remaining staples from the carton before discarding. Select a smooth work surface which will not scratch or damage parts. Remove all parts from carton and separate into groups as indicated on parts list. Please ensure all parts are included prior to assembl . Use of power tools to complete assembly is not recommended.

**Customer Service 1-800-949-9974**

Date Purchased: _____

OUTPUT AT 82.69% OF ACTUAL SIZE

Job # / Name: 21167 Assembly Inst. Revision
File Name: 21167_RS_dsk_warn_eng.ai
Merchant: XXXXXXXXX
Source/Vendor: ODC / Li & Fung
Dieline Name: 8.5 x 11
☐ Vendor Supplied ☐ Created In-House
Package Type:
☐ Box ☐ Insert/J-Card ☐ Blister
☐ Label ☐ Poly Bag ☐ Hangtag
☐ Belly Band ☐ Clamshell
■ Other Book Template
Colors:
■ Black
Dieline Colors (Add addtl if necessary):
FPO Callout FPO Dieline

| Round: | Date: | Artist Initials: |
|---|---|---|
| 1 | 05.09.11 | RC |
| 1b | 08.03.11 | rt |
| 1c | 08.16.11 | rt |

Office DEPOT. Private Brand
6600 North Military Trail, Boca Raton, FL 33496
round 1
☐ FINAL
Release Artist: XX
Original Release: XX.XX.11

| PACKAGING TEAM | INITIAL | DATE |
|---|---|---|
| Design Manager | | |
| Production Manager | | |
| Proofreader | | |
| Copywriter | | |
| Project Manager | | |

| MERCHANTS & QA | INITIAL | DATE |
|---|---|---|
| Merchant | | |
| Quality Assurance | | |
| Customer Service | | |

8.5”

11”

## ⚠ Avertissement

**Prière d’utiliser le mobilier à bon escient et avec prudence. Une mauvaise utilisation peut être à l’origine de risques d’accident ou peut endommager le mobilier et les articles ménagers. *Lire attentivement le tableau suivant.***

| Faites attention : | Les risques : | Comment éviter : |
|---|---|---|
| Enfants monter sur des meubles. Un enfant peut essayer d'atteindre un jouet ou tout autre objet en s'élevant sur des meubles. Les enfants vont jouer et être actifs à proximité du téléviseur. | Risque de blessures voire la mort. Un enfant s'élevant sur un meuble ou jouant avec une télé peut la faire incliner plus se renverser. | Ne laissez pas les enfants monter ou jouer près de la télé. Ne posez jamais de jouets, nourriture, etc. sur les étagères ou les tiroirs supérieurs. Les enfants pourraient tenter des les attraper par curiosité. |
| Etagères et/ou tiroirs surchargées. Le chargement impropre peut rendre des meubles instable. | Risque de blessures voire la mort ou dommages aux meubles et/ou au équipement. Etagères/tiroirs surchargées peuvent casser. | Ne jamais excéder les limites de poids indiquées dans les instructions. Charger l’étagères/tiroirs à partir du bas et finir au haut. Placer objets les plus lourds sur l’étagères/tiroirs inférieures. Déchargez les tiroirs et les étagères de haut en bas avant de déplacer les meubles. |
| Plaçant une télévision sur meubles qui ne sont pas conçus pour supporter une télévision. | Risque de blessures voire la mort. Les téléviseurs peuvent être tres lourds. Le poids et l’emplacement du tube image ont tendance à rendre les téléviseurs instables et enclins à tomber vers l’avant. | Ce produit n'est pas conçu pour supporter une télé. |
| Meubles qui sont déplacés incorrectement. | Risque de blessures voire la mort ou dommages aux meubles et/ou au équipement. Les meubles peuvent incliner en avant et casser si non déplacé soigneusement au-dessus des obstacles ou à travers une surface changeante (ex: d'un plancher en bois au plancher tapissé). | Ne poussez pas les meubles, en particulier sur un sol avec une moquette. Obtenez l'aide de quelqu'un pour soulever le meuble et placer dans son nouvel emplacement. Désassemblez toutes les tables, étagères ou portes de verre avant de se déplacer. |

Nous vous remercions d’avoir acheté ce produit et espérons que vous en serez entièrement satisfait pendant de longues années. Ce produit est couvert par une garantie limitée de 5 ans et a été conçu pour répondre aux besoins d’aujourd’hui.

**N’hésitez pas à nous appeler!**
**NE RENVOYEZ PAS LE PRODUIT AU MAGASIN.**
Pour obtenir de l’aide lors du montage ou des informations sur le produit, veuillez appeler notre numéro sans frais : 1-800-949-9974, du lundi au vendredi, de 8 h à 20 h HNE.
Notre personnel se fera un plaisir de vous fournir l’aide nécessaire.
Les pièces de rechange seront expédiées depuis notre unité de production dans un délai de 1 à 2 jours ouvrables.

**Le poids maximum toléré du panneau supérieur est de 63.7 kg (140 lb). Le poids maximum toléré est de 3.36 kg (7.39 lb) pour le petit tiroir et de 9.1 kg (20 lb) pour le grand tiroir.**

Le numéro de lot figure sur un panneau latéral. Veuillez l ' inscrire dans l ' espace ci-dessous à des fins de consultation future. Notez la date d 'achat ci-dessous et enregistrez ce guide pour une utilisation ultérieure.

Communiquez au besoin avec le service après-vente au 1 800 949-9974. Pour le service à la clientèle, vous trouverez l’autocollant avec les informations du fournisseur sur le Panneau arriére.

**REMARQUE :** Veuillez lire toutes les directives avant de procéder au montage. Examinez tout le matériel d’emballage avant de jeter le carton. Retirez les agrafes de ce dernier avant de le jeter. Choisissez une surface de travail lisse qui ne pourra ni égratigner ni endommager les pièces. Enlevez toutes les pièces du carton et répartissez-les en groupes tel qu’indiqué sur la liste des pièces. Assurez-vous que toutes les pièces ont été incluses avant de commencer le montage. L’utilisation d’outils électriques n’est pas recommandée pour le montage.

**Service à la clientèle : 1-800-949-9974** Date d’achat :_____

OUTPUT AT 82.69% OF ACTUAL SIZE

Job # / Name: 21167 Assembly Inst. Revision
File Name: 21167_RS_dsk_warn_fr.ai
Merchant: XXXXXXXXX
Source/Vendor: ODC / Li & Fung
Dieline Name: 8.5 x 11
☐ Vendor Supplied ☐ Created In-House
Package Type:
☐ Box ☐ Insert/J-Card ☐ Blister
☐ Label ☐ Poly Bag ☐ Hangtag
☐ Belly Band ☐ Clamshell
■ Other Book Template
Colors:
■ Black
Dieline Colors (Add addtl if necessary):
FPO Callout FPO Dieline

| Round: | Date: | Artist Initials: |
|---|---|---|
| 1 | 05.09.11 | RC |
| 1b | 08.16.11 | rt |
| 1c | 08.22.11 | mr |

Office DEPOT. Private Brand
6600 North Military Trail, Boca Raton, FL 33496
round 1 ☐ FINAL
Release Artist: XX
Original Release: XX.XX.11

| PACKAGING TEAM | INITIAL | DATE |
|---|---|---|
| Design Manager | | |
| Production Manager | | |
| Proofreader | | |
| Copywriter | | |
| Project Manager | | |

| MERCHANTS & QA | INITIAL | DATE |
|---|---|---|
| Merchant | | |
| Quality Assurance | | |
| Customer Service | | |

8.5”

11”

## ⚠ Advertencia

**Por favor use su mueble correctamente y seguramente. El uso impropio puede causar riesgos de seguridad o daño al mueble o artículos domésticos. *Cuidadosamente lea la tabla a continuación.***

| Tenga cuidado con: | Puede ocurrir: | Como evitar: |
|---|---|---|
| Niños subiéndose a los muebles. Un niño tratara de alcanzar un juguete u otro objeto subiéndose a los muebles. Niños muy activos que juegan cerca del televisor. | Riesgo de lesión o muerte. Un niño subiéndose a un mueble o jugando con el televisor puede causar que se caiga. | Nunca permita que lo niños se suban o jueguen con los muebles. No coloque juguetes, comida, etc. sobre las gavetas o repisas superiores. Los niños trataran de subirse para alcanzarlos o por curiosidad. |
| Gavetas y repisas con sobrelleno. Colocando objetos de forma incorrecta puede causar el mueble ser inestable. | Riesgo de lesión o muerte o daño al mueble y equipo. Gavetas y repisas con sobrelleno se pueden romper. | Consulte sus instrucciones para el peso maximo permitido. Coloque artículos dentro de las gavetas o sobre las repisas empezando de abajo hacia arriba. Coloque los objetos más pesados en las gavetas o repisas inferiores. Descargue las gavetas y repisas empezando de arriba hacia abajo antes de mover el mueble. |
| Colocando un televisor sobre un mueble que no es diseñado para un televisor. | Riesgo de lesión o muerte. El televisor puede ser muy pesado. El peso y la localización del tubo de la pantalla lo hace estar fuera de balance y propensa a volcarse. | Este producto no es diseñado para un televisor. |
| Moviendo muebles de forma incorrecta. | Riesgo de lesión o muerte o daño al mueble y equipo. El mueble puede volcarse o romperse cuando se mueve de forma incorrecta sobre obstáculos o sobre un piso desnivelado (ejemplo: sobre un piso de madera a un piso alfombrado). | No empuje el mueble especialmente sobre la alfombra. Consiga que alguien le ayude a levantar el mueble para poder colocarlo en su lugar. Desensamble cualquier mesa, estante o puerta de vidrio antes de mover. |

Le damos las gracias por adquirir este producto. Confiamos en que quede completamente satisfecho con sus prestaciones. Este producto tiene una garantía limitada de 5 años y ha sido creado atendiendo al estilo de vida de hoy día.

**ANTES DE DEVOLVERLO, ¡LLÁMENOS!**
Si desea más información sobre el montaje, llámenos sin coste adicional alguno al siguiente teléfono de 8 de la mañana a 8 de la tarde de lunes a viernes (hora del Este de EE. UU.): +1-800-949-9974 Nuestro personal le proporcionará toda la ayuda que necesite.
Las piezas dañadas o no adjuntadas saldrán de nuestras instalaciones en uno o dos días hábiles.

**El peso máximo permitido que se recomienda es de 63.7 kg (140 libras) para la superficie superior.El peso máximo permitido que se recomienda es de 3.36 kg (7.39 libras) para cajones pequeños y 3.36 kg (7.39 libras) para cajones grandes.**

El lote # está ubicado en un panel lateral.Anótelo en el espacio siguiente para poder consultarlo en el futuro. Anote la fecha de compra en el espacio a continuación y guarde este documento para poder consultarlo. El teléfono de asistencia y repuestos es 1-800-949-9974. Para servicio al cliente, encontrará la etiqueta con las informaciones del proveedor en el Panel trasero.

**NOTA:** Lea atentamente toda la hoja de instrucciones antes de comenzar el montaje. Antes de deshacerse del embalaje compruebe que no ha olvidado nada en su interior. Seleccione una superficie de trabajo lisa que no raye ni dañe las partes. Quite cualquier grapa u accesorio fijado al cartón antes de tirarlo. Una vez apartadas las piezas, sepárelas en grupos como se indica en la lista. Cerciórese de que tiene todas las piezas antes de comenzar el ensamblaje. No se recomienda utilizar herramientas muy potentes para ensamblar este mueble.
**Nuestro teléfono de atención al cliente es +1-800-949-9974** Fecha de compra: _____

OUTPUT AT 82.69% OF ACTUAL SIZE

Job # / Name: 21167 Assembly Inst. Revision
File Name: 21167_RS_dsk_warn_sp.ai
Merchant: XXXXXXXXX
Source/Vendor: ODC / Li & Fung
Dieline Name: 8.5 x 11
☐ Vendor Supplied ☐ Created In-House
Package Type:
☐ Box ☐ Insert/J-Card ☐ Blister
☐ Label ☐ Poly Bag ☐ Hangtag
☐ Belly Band ☐ Clamshell
■ Other Book Template
Colors:
■ Black
Dieline Colors (Add addtl if necessary):
FPO Callout FPO Dieline

| Round: | Date: | Artist Initials: |
|---|---|---|
| 1 | 05.09.11 | RC |
| 1b | 08.16.11 | rt |
| 1c | 09.14.11 | rt |

Office DEPOT. Private Brand
6600 North Military Trail, Boca Raton, FL 33496
round 1 ☐ FINAL
Release Artist: XX
Original Release: XX.XX.11

| PACKAGING TEAM | INITIAL | DATE |
|---|---|---|
| Design Manager | | |
| Production Manager | | |
| Proofreader | | |
| Copywriter | | |
| Project Manager | | |

| MERCHANTS & QA | INITIAL | DATE |
|---|---|---|
| Merchant | | |
| Quality Assurance | | |
| Customer Service | | |

# PARTS LIST LISTE DES PIÈCES LISTA DE PIEZAS

| Name<br>Nom<br>Nombre | Part<br>Pièce<br>Pieza | Qty.<br>Qté<br>Cantidad |
|---|---|---|
| A Top shelf<br>Tablette supérieure<br>Tablero superior | | 1 |
| B Fixed shelf<br>la tablette fixe<br>repisa fija | 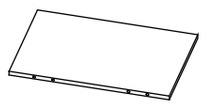 | 1 |
| C Partition<br>Partition<br>Tabique | 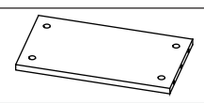 | 1 |
| D Connect plate<br>Plaque de connexion<br>Placa de conexión | | 1 |
| E Upper support rail<br>Glissière de soutien supérieur<br>Corredera de soporte superiorv | | 1 |
| F Lower support rail<br>Glissière de soutien<br>Corredera de soporte | | 1 |
| G Left side panel<br>Panneau gauche<br>Panel lateral izquierdo | 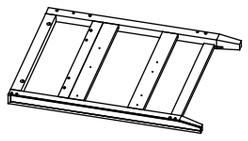 | 1 |
| H Right side panel<br>Panneau droit<br>Panel derecho | 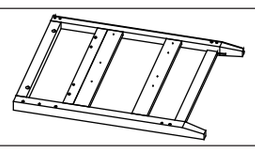 | 1 |
| I Back panel<br>Panneau arrière<br>Panel trasero | 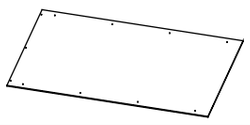 | 1 |
| J Small drawer front<br>Face avant du petit tiroir<br>Cajón pequeño frontal | 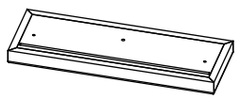 | 1 |
| K Small drawer left side<br>Côté gauche du petit tiroir<br>Cajón pequeño izquierdo | | 1 |
| L Drawer right side<br>Côté droit du petit tiroir<br>Cajón pequeño derecho | | 1 |
| M Small drawer back<br>Face arrière du petit tiroir<br>Cajón pequeño trasero | | 1 |

| Name<br>Nom<br>Nombre | Part<br>Pièce<br>Pieza | Qty.<br>Qté<br>Cantidad |
|---|---|---|
| N Small drawer bottom<br>Fond du tiroir<br>Cajón inferior | 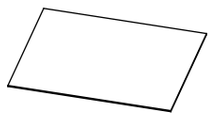 | 1 |
| O Big drawer front<br>Face avant du grand tiroir<br>Cajón grande frontal | 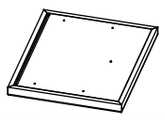 | 1 |
| P Big drawer left Side<br>Côté gauche du grand tiroir<br>Cajón grande izquierdo | 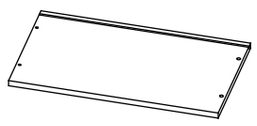 | 1 |
| Q Big drawer right side<br>Côté droit du grand tiroir<br>Cajón grande derecho | 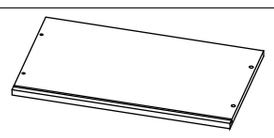 | 1 |
| R Big drawer back<br>Face arrière du grand tiroir<br>Cajón grande trasero | 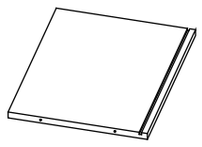 | 1 |
| S Small drawer bottom<br>Fond du tiroir<br>Cajón inferior | 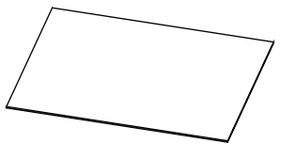 | 1 |

OUTPUT AT 82.69% OF ACTUAL SIZE

Job # / Name: 21167 Assembly Instruction Revision
File Name: 21167_RS_dsk_prts.ai

Merchant: XXXXXXXXX
Source/Vendor: ODC / Li & Fung

Dieline Name: 8.5 x 11
☐ Vendor Supplied ☐ Created In-House

Package Type:
☐ Box ☐ Insert/J-Card ☐ Blister
☐ Label ☐ Poly Bag ☐ Hangtag
☐ Belly Band ☐ Clamshell
■ Other Book Template

Colors:
■ Black

Dieline Colors (Add addtl if necessary):
FPO Callout FPO Dieline

Office DEPOT. Private Brand
6600 North Military Trail, Boca Raton, FL 33496

round 1 ☐ FINAL

| Round: | Date: | Artist Initials: |
|---|---|---|
| 1 | 05.09.11 | RC |
| 1b | 08.03.11 | rt |
| 1c | 08.15.11 | rt |

Release Artist: XX
Original Release: XX.XX.11

| PACKAGING TEAM | INITIAL | DATE |
|---|---|---|
| Design Manager | | |
| Production Manager | | |
| Proofreader | | |
| Copywriter | | |
| Project Manager | | |

| MERCHANTS & QA | INITIAL | DATE |
|---|---|---|
| Merchant | | |
| Quality Assurance | | |
| Customer Service | | |

# PARTS LIST LISTE DES PIÈCES LISTA DE PIEZAS

| Name<br>Nom<br>Nombre | | Part<br>Pièce<br>Pieza | Qty.<br>Qté<br>Cantidad | Spare<br>Épargner<br>Sobrante |
|---|---|---|---|---|
| 1 | Dowel<br>Goujon<br>Pasador | | 18 | 1 |
| 2 | Pin<br>Goupille<br>Pin | | 16 | 1 |
| 3 | Cam<br>Roulette<br>Cerradura | | 16 | 1 |
| 4 | 1/2" screw (12mm) M3<br>Vis de 12mm M3<br>Tornillo de 12mm M3 | | 26 | 1 |
| 5 | 1/2" screw (12mm) M3.5<br>Vis de 12mm M3,5<br>Tornillo de 12mm M3,5 | | 8 | 1 |
| 6 | 1/2" screw (12.5mm) M4.7<br>Vis de 12,5mm M4,7<br>Tornillo de 12,5mm M4,7 | | 6 | 1 |
| 7 | 1 3/8" screw<br>Vis de 35mm<br>Tornillo de 35mm | | 8 | 1 |
| 8 | 3/4 extension bearing slide,inner part<br>2 glissières à roulement à billes internes<br>2 correderas deslizantes con cojinete de bolas, corredera interior | | 2 | |
| 9 | 3/4 extension bearing slide,outer part<br>2 glissières à roulement à billes externes<br>2 correderas deslizantes con cojinete de bolas, corredera exterior | | 2 | |
| 10 | Full extension bearing slide, inner part<br>3 glissières à roulement à billes internes<br>3 correderas deslizantes con cojinete de bolas, corredera interior | | 2 | |
| 11 | Full extension bearing slide, outer part<br>3 glissières à roulement à billes externes<br>3 correderas deslizantes con cojinete de bolas, corredera exterior | | 2 | |
| 12 | 1 1/4" screw<br>Vis de 30 mm<br>Tornillo de 30 mm | | 2 | |

| Name<br>Nom<br>Nombre | | Part<br>Pièce<br>Pieza | Qty.<br>Qté<br>Cantidad | Spare<br>Épargner<br>Sobrante |
|---|---|---|---|---|
| 13 | Handle<br>Poignée<br>Manilla | | 2 | |
| 14 | Small panel connector<br>Connecteur de petit panneau<br>Conector de paneles pequeño | | 2 | |
| 15 | Big panel connector<br>Connecteur de grand panneau<br>Conector de paneles grande | | 2 | |
| 16 | File hanger<br>Barre de suspension du classeur<br>Barra de archivos del armario archivador | | 1 | |
| 17 | Glue<br>Colle<br>Pegamento | | 2 | |
| 18 | Nail<br>Clou<br>Clavo | | 11 | 1 |
| 19 | File rail, side panel<br>Fixation latérale du classeur<br>Sujetador de aparador del armario archivador | | 2 | |
| 20 | File rail, back panel<br>Fixation arrière du classeur<br>Sujetador de tablero del armario archivador | | 1 | |
| 21 | Plastic spacer<br>Espaciador<br>Espaciador | | 2 | |

OUTPU T AT 82.69% OF ACTUA L SIZE

Job # / Name: 21167 Assembly Instruction revision
File Name: 21167_RS_dsk_scrws.ai

Merchant: XXXXXXXXX

Source/Vendor: ODC / Li & Fung

Dieline Name: 8.5 x 11
☐ Vendor Supplied ☐ Created In-House

Package Type:
☐ Box ☐ Insert/J-Card ☐ Blister
☐ Label ☐ Poly Bag ☐ Hangtag
☐ Belly Band ☐ Clamshell
■ Other Book Template

Colors:
■ Black

Dieline Colors (Add addtl if necessary):
FPO Callout FPO Dieline

| Round: | Date: | Artist Initials: |
|---|---|---|
| 1 | 05.09.11 | RC |
| 1b | 08.16.11 | rt |

Office DEPOT. Private Brand
6600 North Military Trail, Boca Raton, FL 33496

round 1 ☐ FINAL

Release Artist: XX
Original Release: XX. XX .11

| PACKAGING TEAM | INITIAL | DATE |
|---|---|---|
| Design Manager | | |
| Production Manager | | |
| Proofreader | | |
| Copywriter | | |
| Project Manager | | |

| MERCHANTS & QA | INITIAL | DATE |
|---|---|---|
| Merchant | | |
| Quality Assurance | | |
| Customer Service | | |

## SIZE COMPARISON CHART
## TABLEAU DE COMPARAISON DE TAILLES
## TABLA DE COMPARACIÓN DE TAMAÑOS

| | | |
|---|---|---|
| 4 | 1/2" screw (12mm) M3<br>Vis de 12mm M3<br>Tornillo de 12mm M3 | 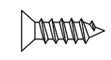 |
| 5 | 1/2" screw (12mm) M3.5<br>Vis de 12mm M3,5<br>Tornillo de 12mm M3,5 | 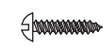 |
| 6 | 1/2" screw (12.5mm) M4.7<br>Vis de 12,5mm M4,7<br>Tornillo de 12,5mm M4,7 | |
| 7 | 1 3/8" screw<br>Vis de 35mm<br>Tornillo de 35mm | 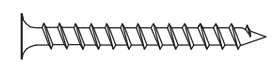 |
| 12 | 1 1/4" screw<br>Vis de 30 mm<br>Tornillo de 30 mm | 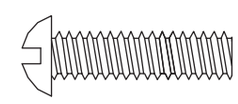 |
| 18 | Nail<br>Clou<br>Clavo | |

OUTPU T AT 82.69% OF ACTUA L SIZE

Job # / Name: 21167 Assembly Instruction revision
File Name: 21167_RS_dsk_scrws.ai

Merchant: XXXXXXXXX

Source/Vendor: ODC / Li & Fung

Dieline Name: 8.5 x 11
☐ Vendor Supplied ☐ Created In-House

Package Type:
☐ Box ☐ Insert/J-Card ☐ Blister
☐ Label ☐ Poly Bag ☐ Hangtag
☐ Belly Band ☐ Clamshell
■ Other Book Template

Colors:
■ Black

Dieline Colors (Add addtl if necessary):
FPO Callout FPO Dieline

| Round: | Date: | Artist Initials: |
|---|---|---|
| 1 | 05.09.11 | RC |
| 1b | 08.16.11 | rt |

Office DEPOT. Private Brand
6600 North Military Trail, Boca Raton, FL 33496

round 1 ☐ FINAL

Release Artist: XX
Original Release: XX. XX .11

| PACKAGING TEAM | INITIAL | DATE |
|---|---|---|
| Design Manager | | |
| Production Manager | | |
| Proofreader | | |
| Copywriter | | |
| Project Manager | | |

| MERCHANTS & QA | INITIAL | DATE |
|---|---|---|
| Merchant | | |
| Quality Assurance | | |
| Customer Service | | |

**Installation of Cams and Pins :**
Screw the Pin into hole. To set Cams correctly, ensure the arrow on the Cam head points to the hole of the Pin it is locking. Lock Cam by turning Cam head one third clockwise with screwdriver. Do not overtighten. Please don’t use an electric screwdriver to assemble the unit.

**Installation des roulettes à blocage et des chevilles :**
Vissez la cheville à l'intérieur du trou.assurez-vous que la flèche sur le dessus de la roulette pointe vers le trou de la cheville à bloquer. Verrouillez la roulette à blocage en tournant le dessus de la roulette d'un tiers de tour en sens horaire à l'aide d'un tournevis. Ne serrez pas trop.
Veuillez ne pas utiliser un tournevis électrique pour assembler ce meuble.

**Instalación de levas y pernos :**
Atornille el pasador en el agujero, asegúrese de que la flecha en la cabeza de la leva apunta hacia el agujero del pasador que esta asegurando. Asegure la leva girando la cabeza un tercio en el sentido de las agujas del reloj. No la apriete en exceso.
No utilice un destornillador eléctrico para ensamblar la unidad.

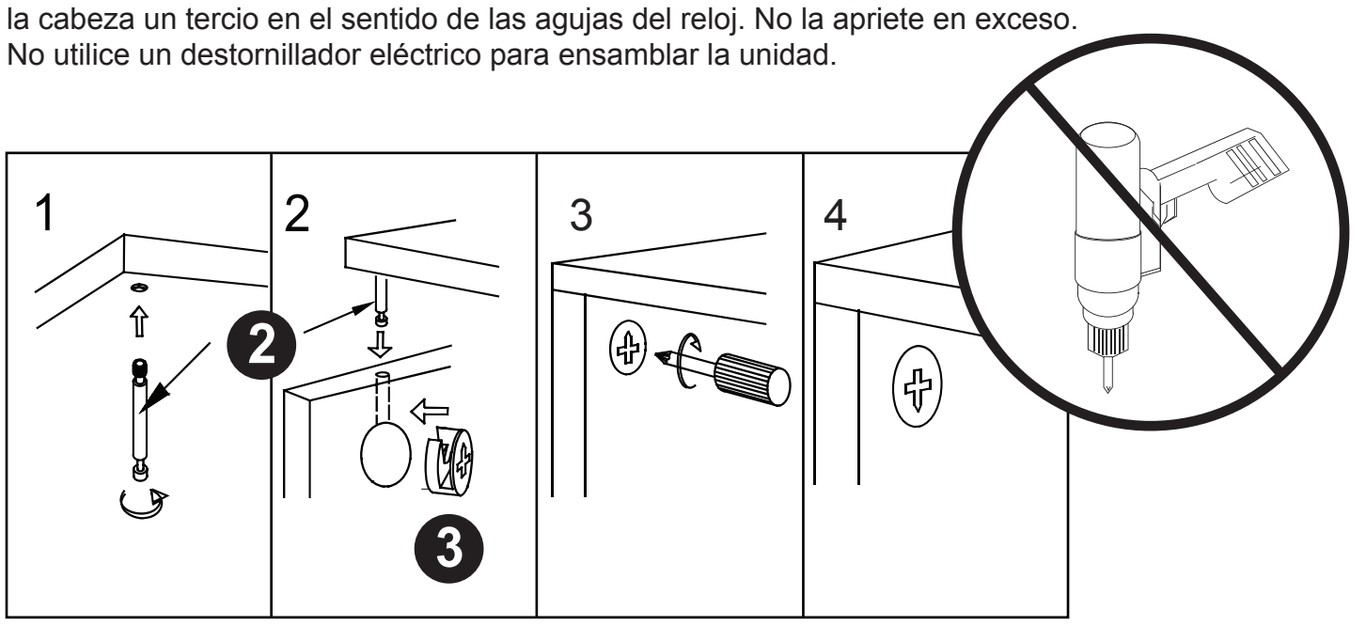


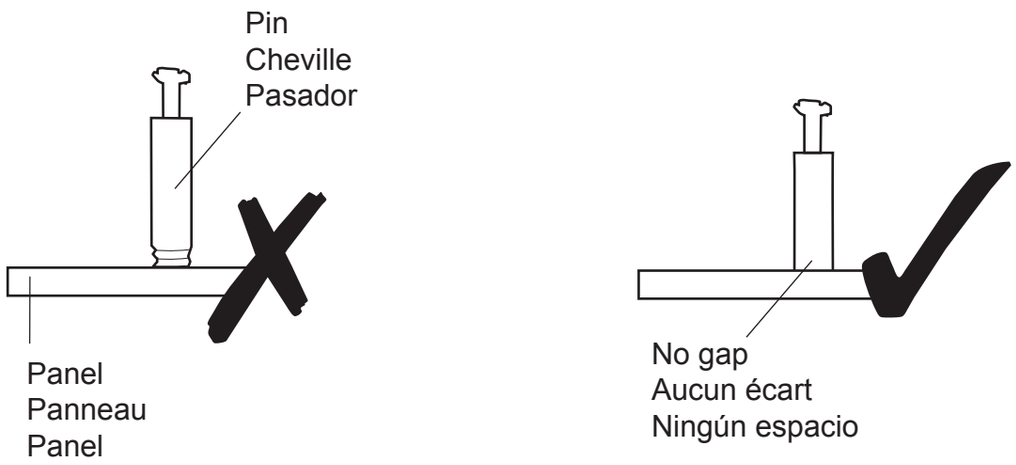


OUTPUT AT 82.69% OF ACTUAL SIZE

Job # / Name: 21167 Assembly Inst. Revision
File Name: 21167_RS_dsk_cam_pin.ai
Merchant: XXXXXXXXX
Source/Vendor: ODC / Li & Fung
Dieline Name: 8.5x11
☐ Vendor Supplied ☐ Created In-House
Package Type:
☐ Box ☐ Insert/J-Card ☐ Blister
☐ Label ☐ Poly Bag ☐ Hangtag
☐ Belly Band ☐ Clamshell
■ Other Book Template
Colors:
■ Black
Dieline Colors (Add addtl if necessary):
FPO Callout FPO Dieline
Office DEPOT. Private Brand
6600 North Military Trail, Boca Raton, FL 33496
round 1
☐ FINAL

| Round: | Date: | Artist Initials: |
|---|---|---|
| 1 | 05.05.11 | RC |
| 1b | 08.16.11 | rt |

Release Artist: XX
Original Release: XX.XX.11

| PACKAGING TEAM | INITIAL | DATE |
|---|---|---|
| Design Manager | | |
| Production Manager | | |
| Proofreader | | |
| Copywriter | | |
| Project Manager | | |

| MERCHANTS & QA | INITIAL | DATE |
|---|---|---|
| Merchant | | |
| Quality Assurance | | |
| Customer Service | | |

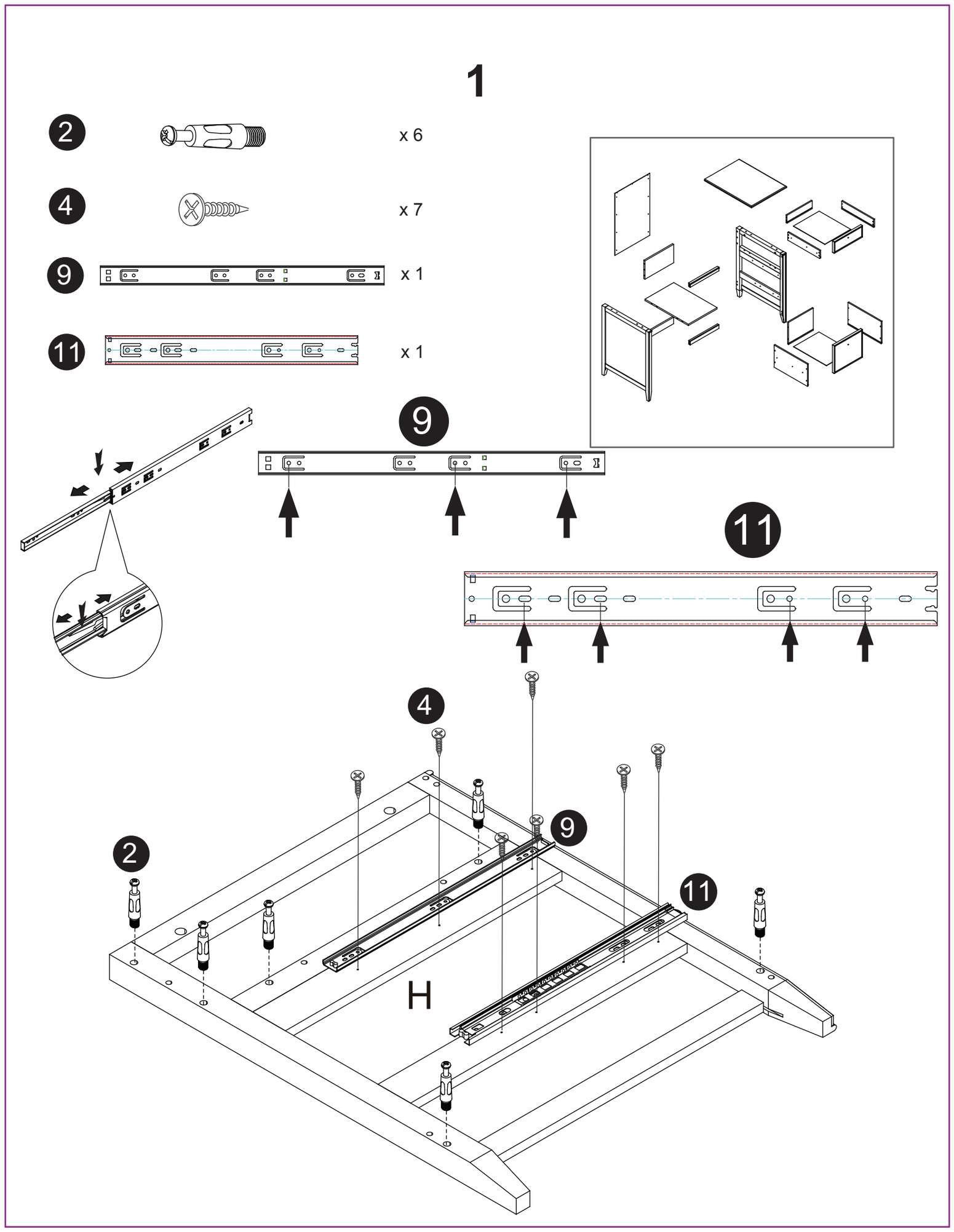


OUTPUT AT 82.69% OF ACTUAL SIZE

Job # / Name: 21167 Assembly Inst. Revision
File Name: 21167_RS_dsk_stp6.ai

Merchant: XXXXXXXXX

Source/Vendor: ODC / Li & Fung

Dieline Name: 8.5 x 11
☐ Vendor Supplied ☐ Created In-House

Package Type:
☐ Box ☐ Insert/J-Card ☐ Blister
☐ Label ☐ Poly Bag ☐ Hangtag
☐ Belly Band ☐ Clamshell
■ Other Book Template

Colors:
■ Black

Dieline Colors (Add addtl if necessary):
■ FPO Callout ■ FPO Dieline

Office DEPOT. Private Brand
6600 North Military Trail, Boca Raton, FL 33496

round 1

☐ FINAL

| Round: | Date: | Artist Initials: |
|---|---|---|
| 1 | 05.05.11 | RC |
| 1b | 08.03.11 | rt |

Release Artist: XX
Original Release: XX.XX.11

| PACKAGING TEAM | INITIAL | DATE |
|---|---|---|
| Design Manager | | |
| Production Manager | | |
| Proofreader | | |
| Copywriter | | |
| Project Manager | | |

| MERCHANTS & QA | INITIAL | DATE |
|---|---|---|
| Merchant | | |
| Quality Assurance | | |
| Customer Service | | |

# 2

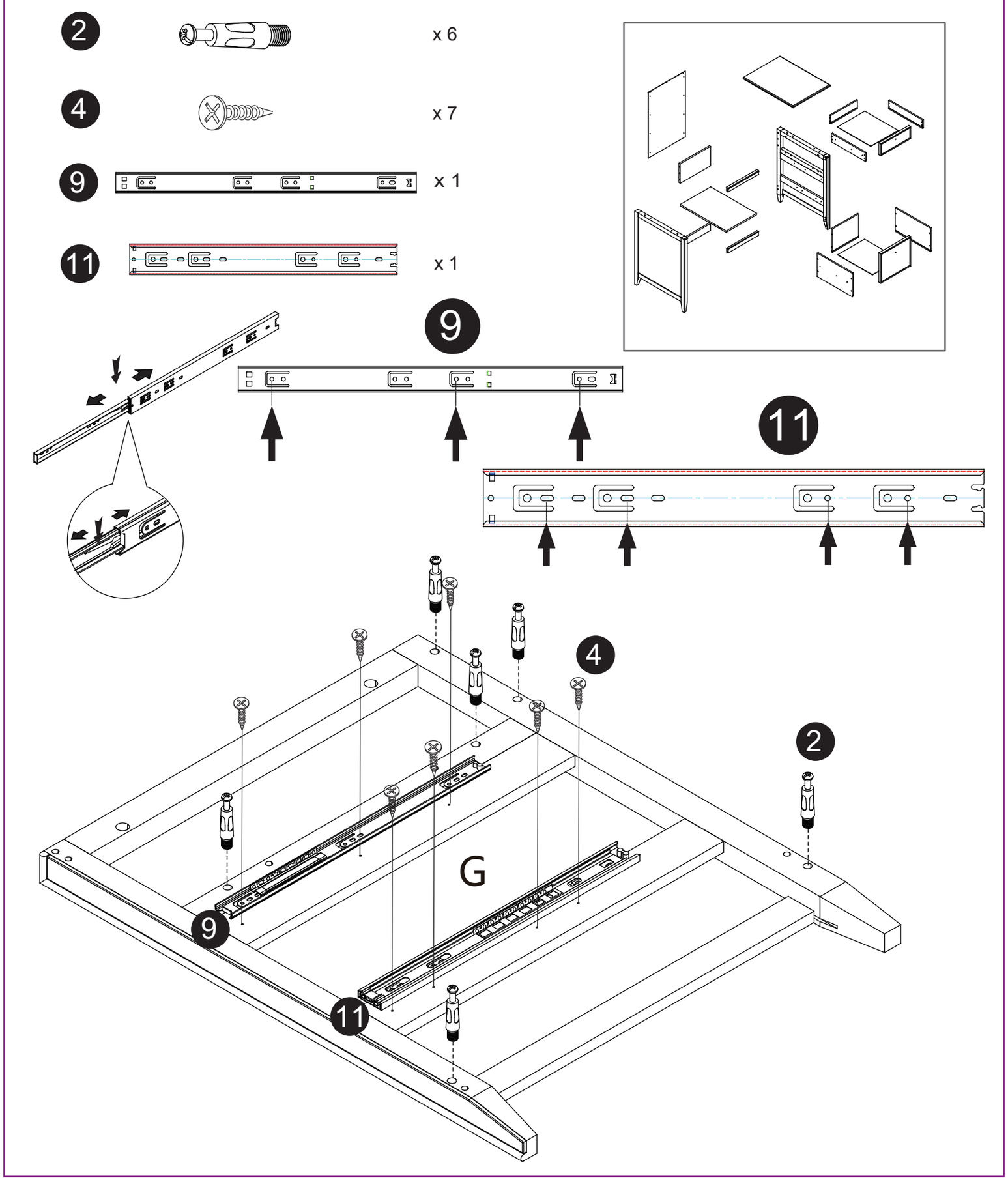


OUTPUT AT 82.69% OF ACTUAL SIZE

| | | |
|---|---|---|
| Job # / Name: 21167 Assembly Inst. Revision<br>File Name: 21167_RS_dsk_stp6.ai | | Round: 1, 1b<br>Date: 05.05.11, 08.03.11<br>Artist Initials: RC, rt |
| Merchant: XXXXXXXXX | Source/Vendor: ODC / Li & Fung | |
| Dieline Name: 8.5 x 11<br>☐ Vendor Supplied ☐ Created In-House<br>Package Type:<br>☐ Box ☐ Insert/J-Card ☐ Blister<br>☐ Label ☐ Poly Bag ☐ Hangtag<br>☐ Belly Band ☐ Clamshell<br>■ Other Book Template | Colors:<br>■ Black<br>Dieline Colors (Add addtl if necessary):<br>■ FPO Callout ■ FPO Dieline | |
| Office DEPOT. Private Brand<br>6600 North Military Trail, Boca Raton, FL 33496 | round 1 ☐ FINAL | Release Artist: XX<br>Original Release: XX.XX.11 |

| PACKAGING TEAM | INITIAL | DATE |
|---|---|---|
| Design Manager | | |
| Production Manager | | |
| Proofreader | | |
| Copywriter | | |
| Project Manager | | |

| MERCHANTS & QA | INITIAL | DATE |
|---|---|---|
| Merchant | | |
| Quality Assurance | | |
| Customer Service | | |

# 3

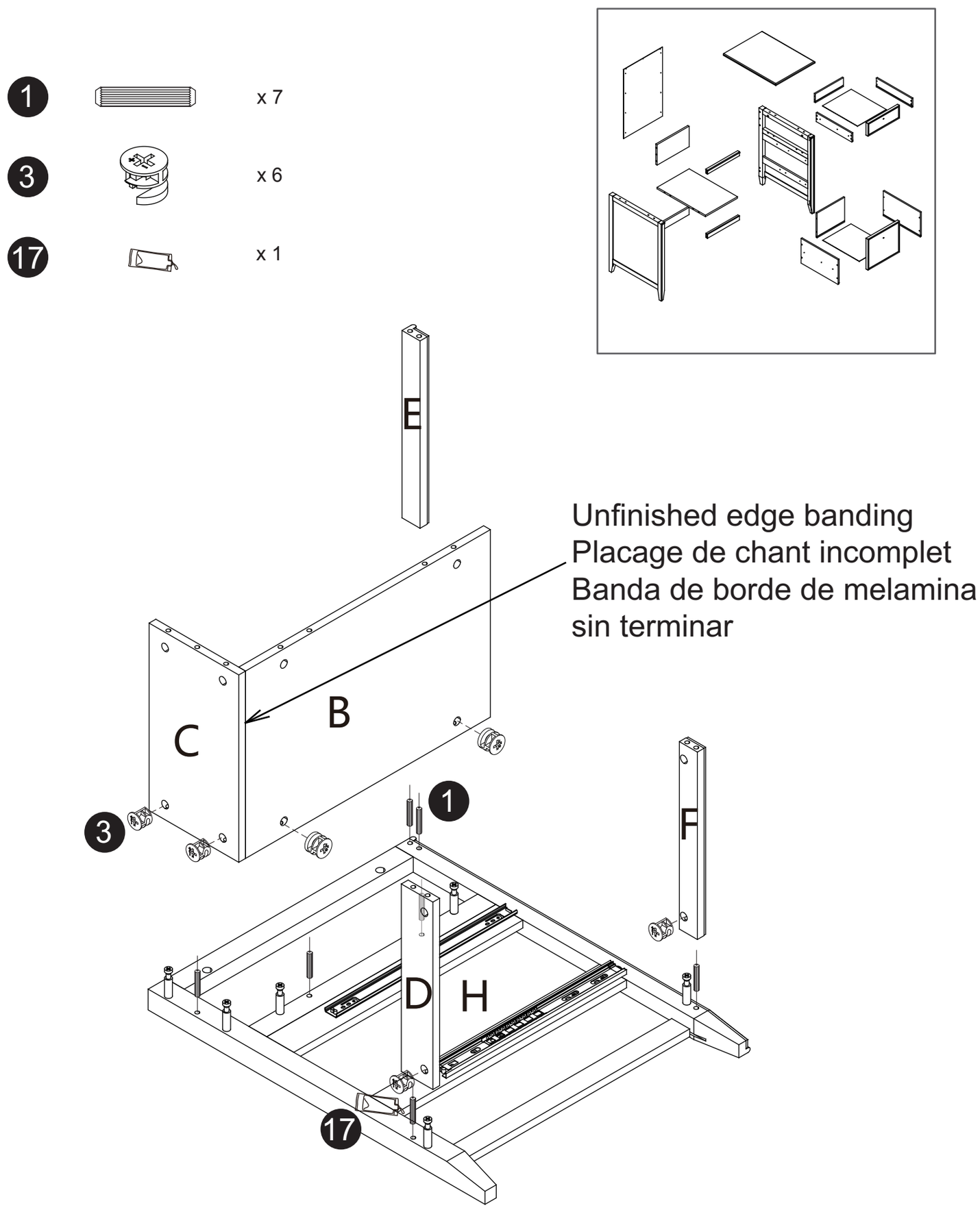


OUTPUT AT 82.69% OF ACTUAL SIZE

| | | |
|---|---|---|
| Job # / Name: 21167 Assembly Inst. Revision<br>File Name: 21167_RS_dsk_stp6.ai | | Round: 1, 1b<br>Date: 05.05.11, 08.03.11<br>Artist Initials: RC, rt |
| Merchant: XXXXXXXXX | Source/Vendor: ODC / Li & Fung | |
| Dieline Name: 8.5 x 11<br>☐ Vendor Supplied ☐ Created In-House<br>Package Type:<br>☐ Box ☐ Insert/J-Card ☐ Blister<br>☐ Label ☐ Poly Bag ☐ Hangtag<br>☐ Belly Band ☐ Clamshell<br>■ Other Book Template | Colors:<br>■ Black<br>Dieline Colors (Add addtl if necessary):<br>FPO Callout FPO Dieline | |
| Office DEPOT. Private Brand<br>6600 North Military Trail, Boca Raton, FL 33496 | round 1 ☐ FINAL | Release Artist: XX<br>Original Release: XX.XX.11 |

| PACKAGING TEAM | INITIAL | DATE |
|---|---|---|
| Design Manager | | |
| Production Manager | | |
| Proofreader | | |
| Copywriter | | |
| Project Manager | | |

| MERCHANTS & QA | INITIAL | DATE |
|---|---|---|
| Merchant | | |
| Quality Assurance | | |
| Customer Service | | |

# 4

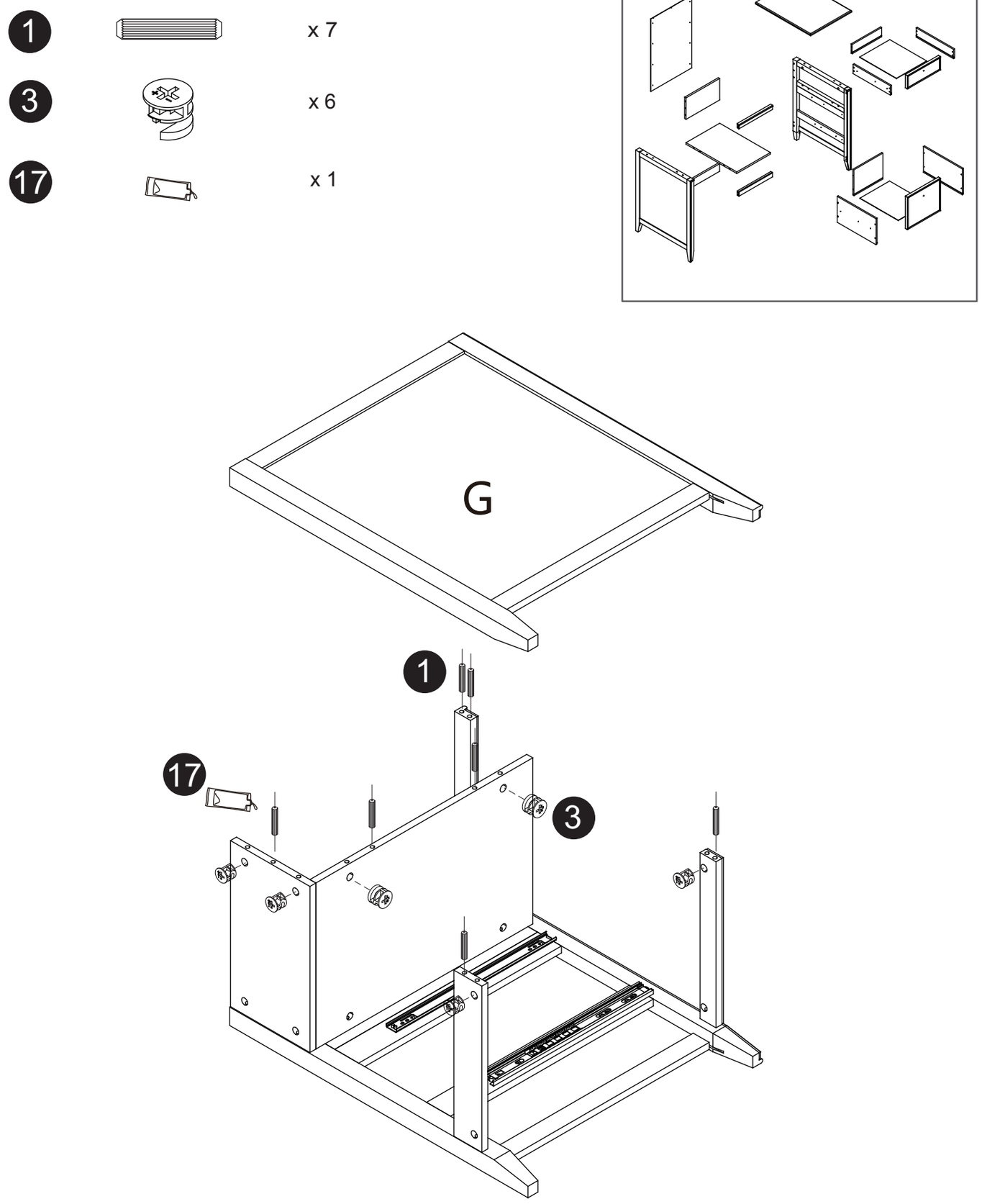


OUTPUT AT 82.69% OF ACTUAL SIZE

Job # / Name: 21167 Assembly Inst. Revision
File Name: 21167_RS_dsk_stp6.ai

Merchant: XXXXXXXXX

Source/Vendor: ODC / Li & Fung

Dieline Name: 8.5 x 11
☐ Vendor Supplied ☐ Created In-House

Package Type:
☐ Box ☐ Insert/J-Card ☐ Blister
☐ Label ☐ Poly Bag ☐ Hangtag
☐ Belly Band ☐ Clamshell
■ Other Book Template

Colors:
■ Black

Dieline Colors (Add addtl if necessary):
■ FPO Callout ■ FPO Dieline

Office DEPOT. Private Brand
6600 North Military Trail, Boca Raton, FL 33496

round 1

☐ FINAL

| Round: | Date: | Artist Initials: |
|---|---|---|
| 1 | 05.05.11 | RC |
| 1b | 08.03.11 | rt |

Release Artist: XX
Original Release: XX.XX.11

| PACKAGING TEAM | INITIAL | DATE |
|---|---|---|
| Design Manager | | |
| Production Manager | | |
| Proofreader | | |
| Copywriter | | |
| Project Manager | | |

| MERCHANTS & QA | INITIAL | DATE |
|---|---|---|
| Merchant | | |
| Quality Assurance | | |
| Customer Service | | |

# 5

2 x 4

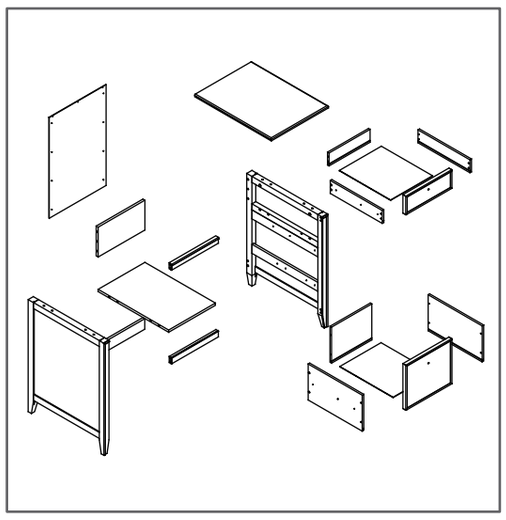

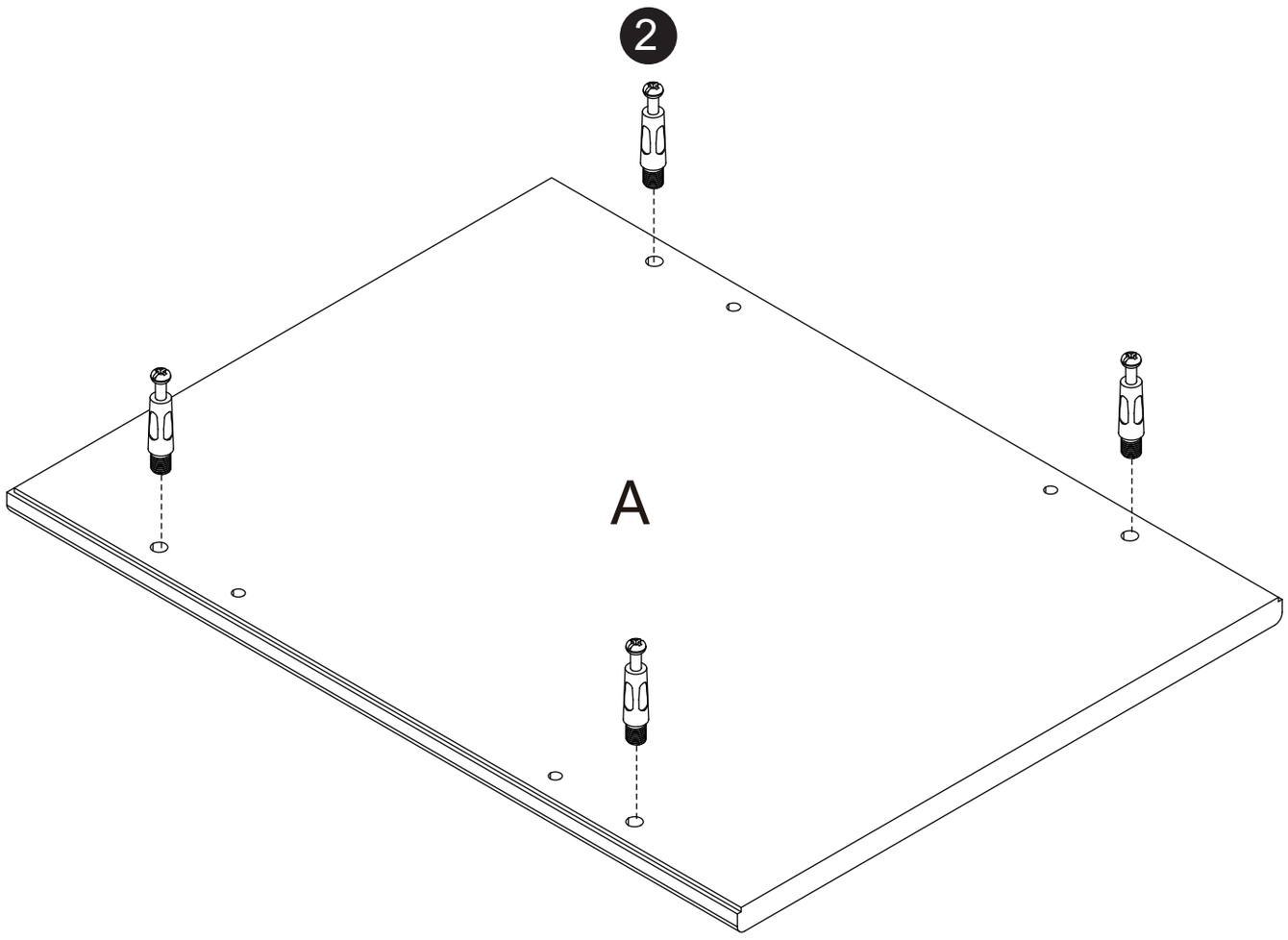


OUTPUT AT 82.69% OF ACTUAL SIZE

Job # / Name: 21167 Assembly Inst. Revision
File Name: 21167_RS_dsk_stp6.ai

Merchant: XXXXXXXXX
Source/Vendor: ODC / Li & Fung

Dieline Name: 8.5 x 11
☐ Vendor Supplied ☐ Created In-House

Package Type:
☐ Box ☐ Insert/J-Card ☐ Blister
☐ Label ☐ Poly Bag ☐ Hangtag
☐ Belly Band ☐ Clamshell
■ Other Book Template

Colors:
■ Black

Dieline Colors (Add addtl if necessary):
FPO Callout FPO Dieline

| Round: | Date: | Artist Initials: |
|---|---|---|
| 1 | 05.05.11 | RC |
| 1b | 08.03.11 | rt |

Office DEPOT. Private Brand
6600 North Military Trail, Boca Raton, FL 33496

round 1 ☐ FINAL

Release Artist: XX
Original Release: XX.XX.11

| PACKAGING TEAM | INITIAL | DATE |
|---|---|---|
| Design Manager | | |
| Production Manager | | |
| Proofreader | | |
| Copywriter | | |
| Project Manager | | |

| MERCHANTS & QA | INITIAL | DATE |
|---|---|---|
| Merchant | | |
| Quality Assurance | | |
| Customer Service | | |

# 6

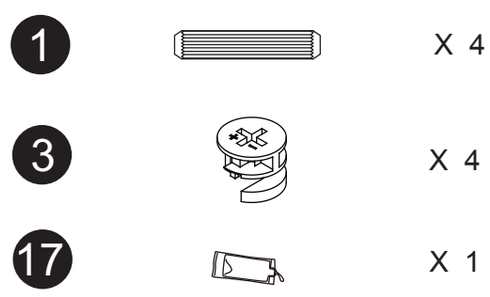


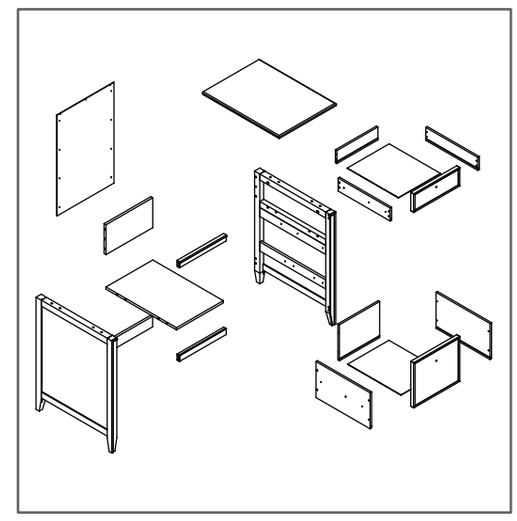

Unfinished edge banding
Placage de chant incomplet
Banda de borde de melamina
sin terminar

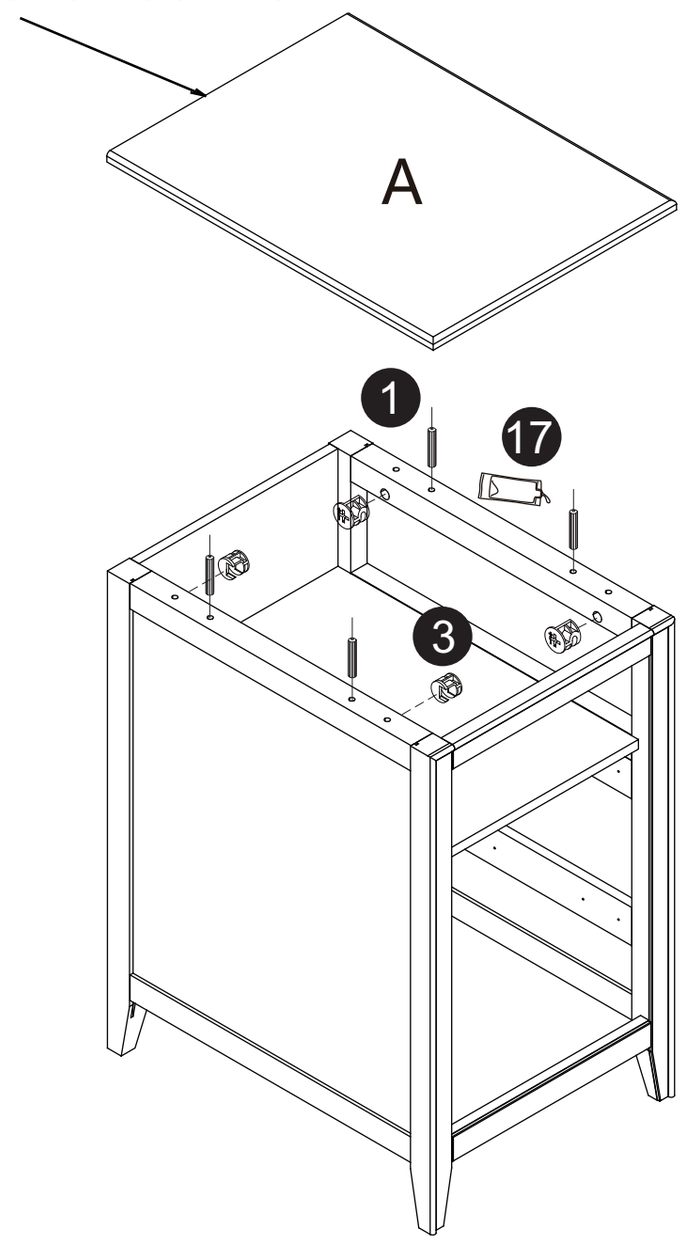


OUTPUT AT 82.69% OF ACTUAL SIZE

Job # / Name: 21167 Assembly Inst. Revision
File Name: 21167_RS_dsk_stp6.ai

Merchant: XXXXXXXXX
Source/Vendor: ODC / Li & Fung

Dieline Name: 8.5 x 11
☐ Vendor Supplied ☐ Created In-House

Package Type:
☐ Box ☐ Insert/J-Card ☐ Blister
☐ Label ☐ Poly Bag ☐ Hangtag
☐ Belly Band ☐ Clamshell
■ Other Book Template

Colors:
■ Black

Dieline Colors (Add addtl if necessary):
FPO Callout FPO Dieline

| Round: | Date: | Artist Initials: |
|---|---|---|
| 1 | 05.05.11 | RC |
| 1b | 08.03.11 | rt |

Office DEPOT. Private Brand
6600 North Military Trail, Boca Raton, FL 33496

round 1 ☐ FINAL

Release Artist: XX
Original Release: XX.XX.11

| PACKAGING TEAM | INITIAL | DATE |
|---|---|---|
| Design Manager | | |
| Production Manager | | |
| Proofreader | | |
| Copywriter | | |
| Project Manager | | |

| MERCHANTS & QA | INITIAL | DATE |
|---|---|---|
| Merchant | | |
| Quality Assurance | | |
| Customer Service | | |

# 7

18 x 11

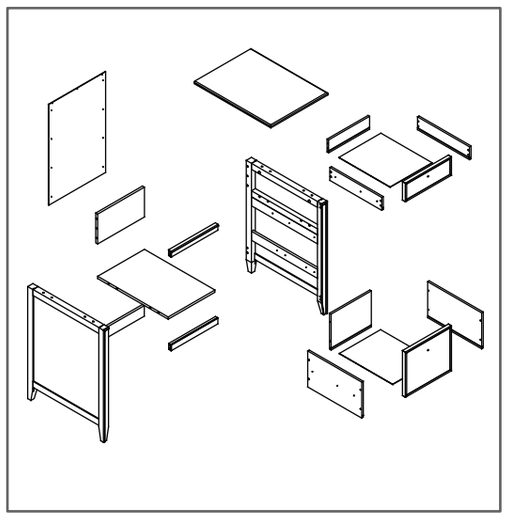

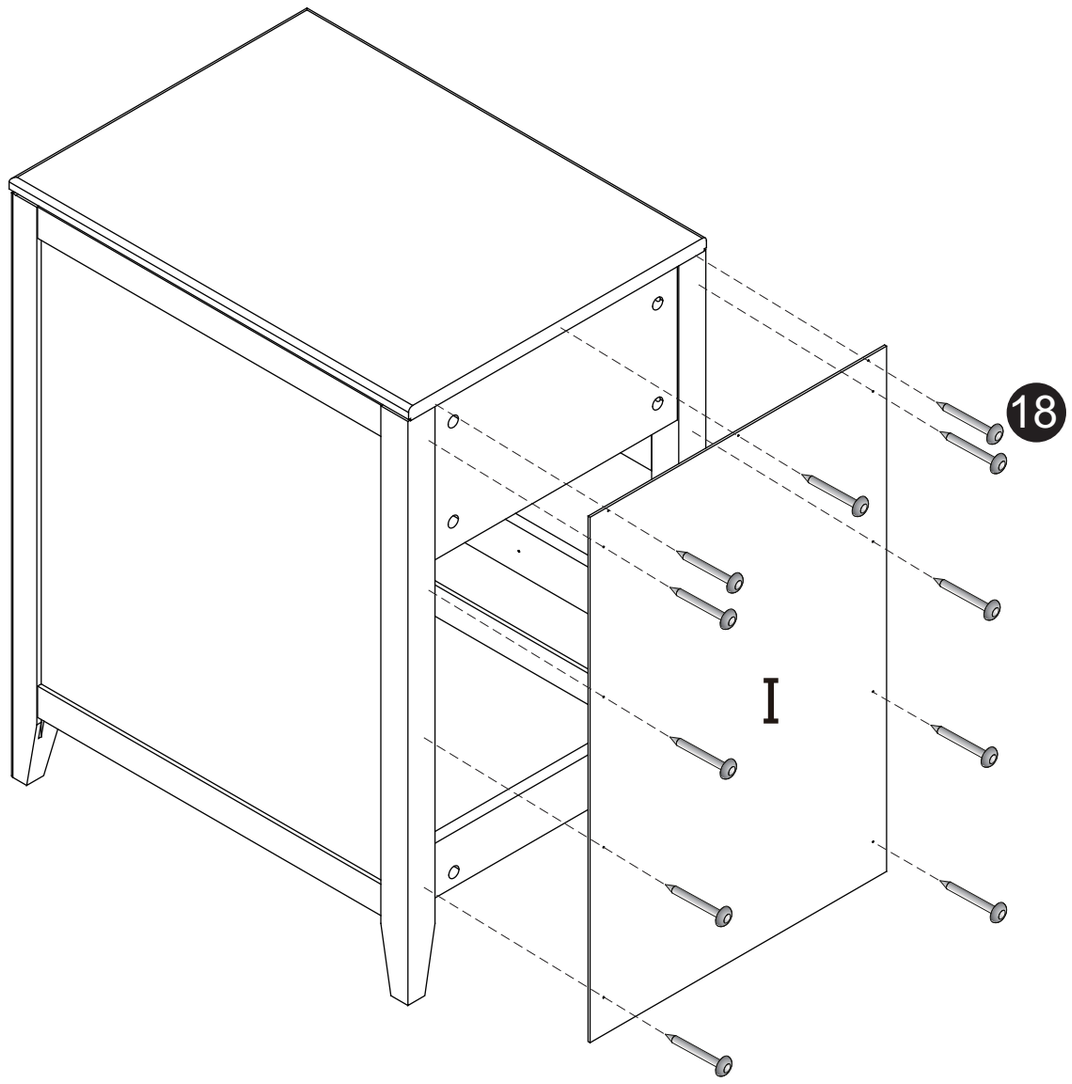


OUTPUT AT 82.69% OF ACTUAL SIZE

Job # / Name: 21167 Assembly Inst. Revision
File Name: 21167_RS_dsk_stp6.ai

Merchant: XXXXXXXXX

Source/Vendor: ODC / Li & Fung

Dieline Name: 8.5 x 11
☐ Vendor Supplied ☐ Created In-House

Package Type:
☐ Box ☐ Insert/J-Card ☐ Blister
☐ Label ☐ Poly Bag ☐ Hangtag
☐ Belly Band ☐ Clamshell
■ Other Book Template

Colors:
■ Black

Dieline Colors (Add addtl if necessary):
■ FPO Callout ■ FPO Dieline

| Round: | Date: | Artist Initials: |
|---|---|---|
| 1 | 05.05.11 | RC |
| 1b | 08.03.11 | rt |

Office DEPOT. Private Brand
6600 North Military Trail, Boca Raton, FL 33496

round 1 ☐ FINAL

Release Artist: XX
Original Release: XX.XX.11

| PACKAGING TEAM | INITIAL | DATE |
|---|---|---|
| Design Manager | | |
| Production Manager | | |
| Proofreader | | |
| Copywriter | | |
| Project Manager | | |

| MERCHANTS & QA | INITIAL | DATE |
|---|---|---|
| Merchant | | |
| Quality Assurance | | |
| Customer Service | | |

# 8

| | | |
|---|---|---|
| 5 | 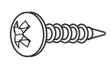 | x 4 |
| 7 | 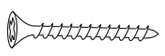 | x 4 |
| 14 | | x 2 |

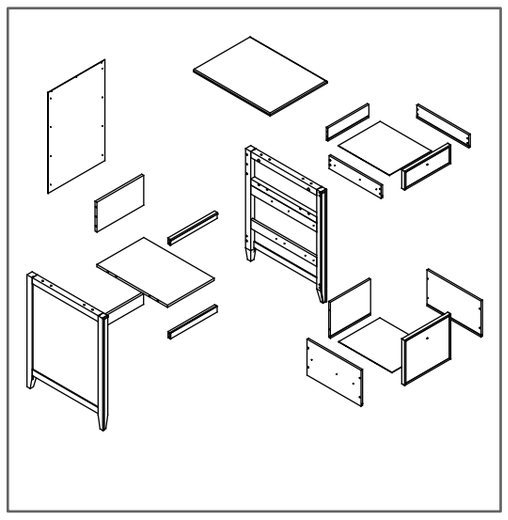

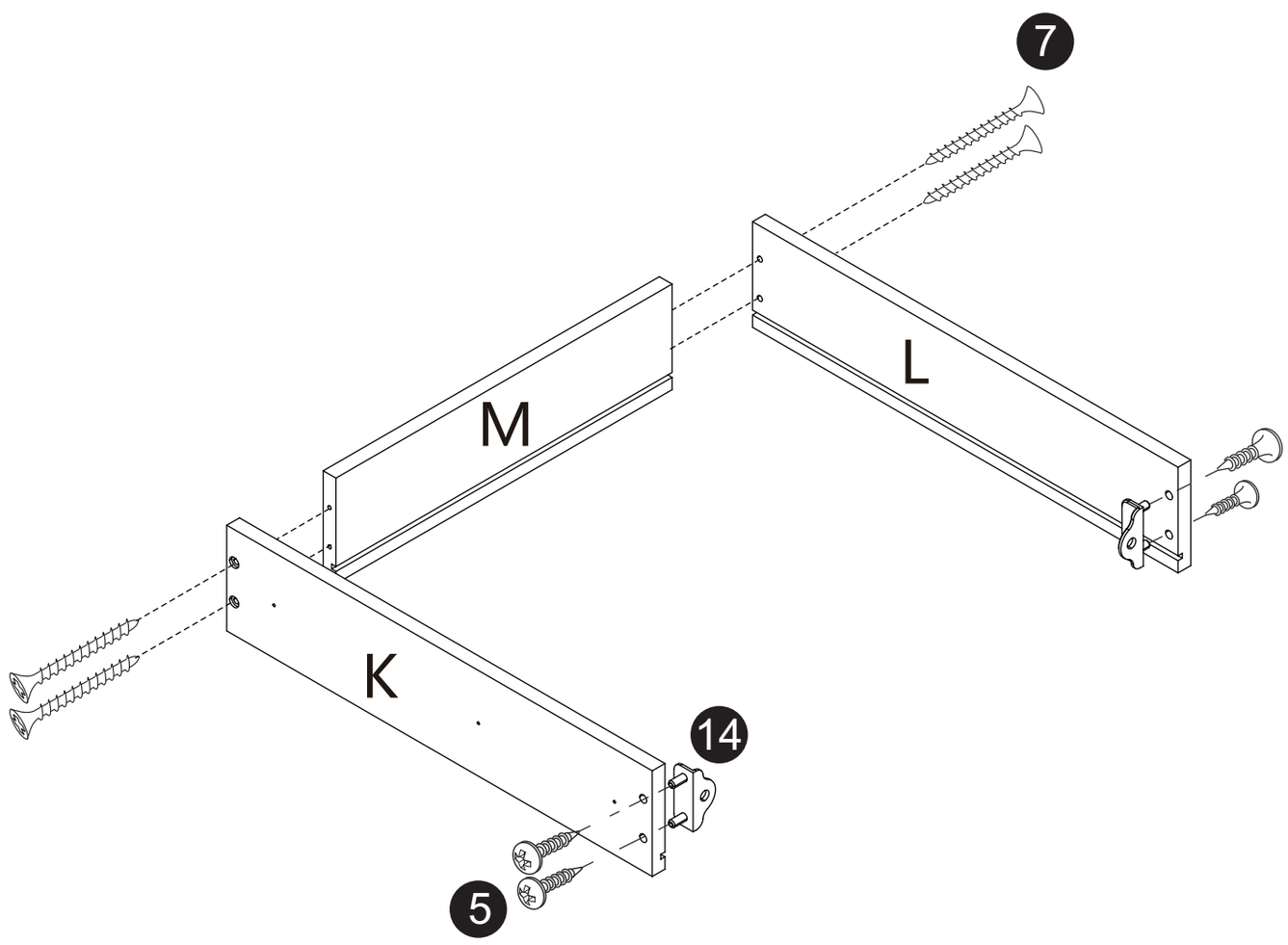


OUTPUT AT 82.69% OF ACTUAL SIZE

Job # / Name: 21167 Assembly Inst. Revision
File Name: 21167_RS_dsk_stp6.ai

Merchant: XXXXXXXXX
Source/Vendor: ODC / Li & Fung

Dieline Name: 8.5 x 11
☐ Vendor Supplied ☐ Created In-House

Package Type:
☐ Box ☐ Insert/J-Card ☐ Blister
☐ Label ☐ Poly Bag ☐ Hangtag
☐ Belly Band ☐ Clamshell
■ Other Book Template

Colors:
■ Black

Dieline Colors (Add addtl if necessary):
FPO Callout FPO Dieline

| Round: | Date: | Artist Initials: |
|---|---|---|
| 1 | 05.05.11 | RC |
| 1b | 08.03.11 | rt |

Office DEPOT. Private Brand
6600 North Military Trail, Boca Raton, FL 33496

round 1 ☐ FINAL

Release Artist: XX
Original Release: XX.XX.11

| PACKAGING TEAM | INITIAL | DATE |
|---|---|---|
| Design Manager | | |
| Production Manager | | |
| Proofreader | | |
| Copywriter | | |
| Project Manager | | |

| MERCHANTS & QA | INITIAL | DATE |
|---|---|---|
| Merchant | | |
| Quality Assurance | | |
| Customer Service | | |

# 9

| | | |
|---|---|---|
| 6 | | x 2 |
| 12 | | x 1 |
| 13 | | x 1 |
| 21 | | x 1 |

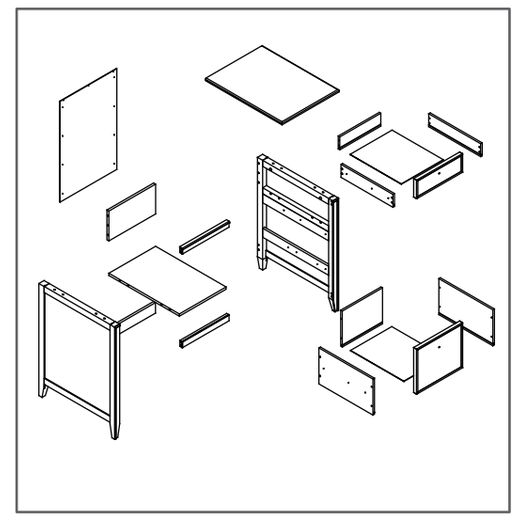

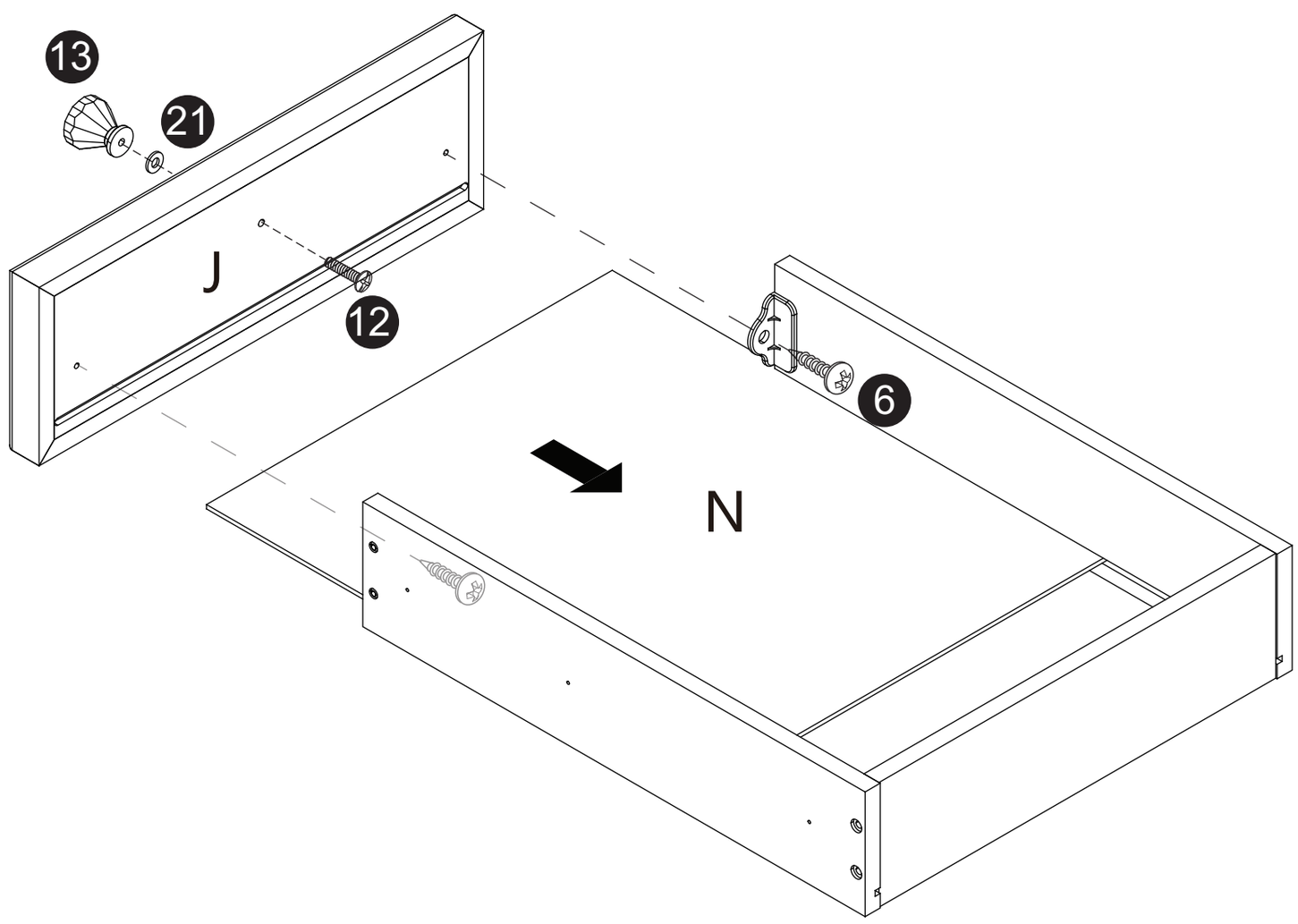


OUTPUT AT 82.69% OF ACTUAL SIZE

Job # / Name: 21167 Assembly Inst. Revision
File Name: 21167_RS_dsk_stp6.ai

Merchant: XXXXXXXXX

Source/Vendor: ODC / Li & Fung

Dieline Name: 8.5 x 11
☐ Vendor Supplied ☐ Created In-House

Package Type:
☐ Box ☐ Insert/J-Card ☐ Blister
☐ Label ☐ Poly Bag ☐ Hangtag
☐ Belly Band ☐ Clamshell
■ Other Book Template

Colors:
■ Black

Dieline Colors (Add addtl if necessary):
FPO Callout FPO Dieline

| Round: | Date: | Artist Initials: |
|---|---|---|
| 1 | 05.05.11 | RC |
| 1b | 08.03.11 | rt |

Office DEPOT. Private Brand
6600 North Military Trail, Boca Raton, FL 33496

round 1 ☐ FINAL

Release Artist: XX
Original Release: XX.XX.11

| PACKAGING TEAM | INITIAL | DATE |
|---|---|---|
| Design Manager | | |
| Production Manager | | |
| Proofreader | | |
| Copywriter | | |
| Project Manager | | |

| MERCHANTS & QA | INITIAL | DATE |
|---|---|---|
| Merchant | | |
| Quality Assurance | | |
| Customer Service | | |

# 10

4 x 6

8  x 2

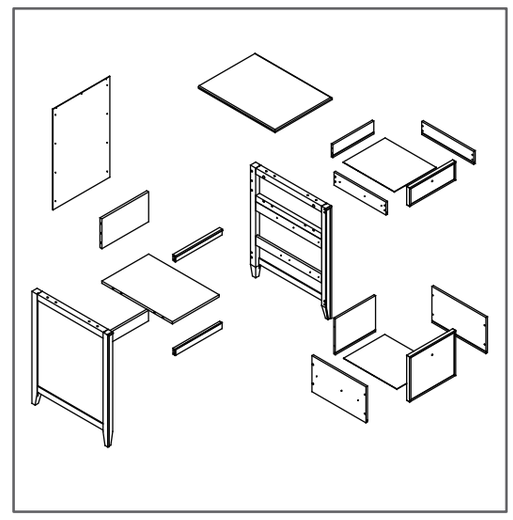

8

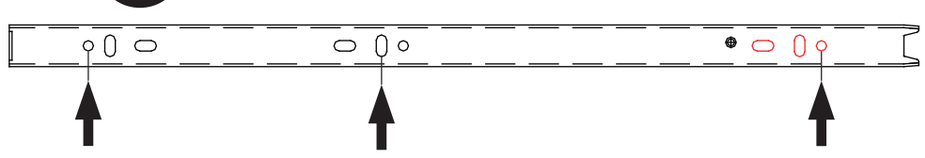

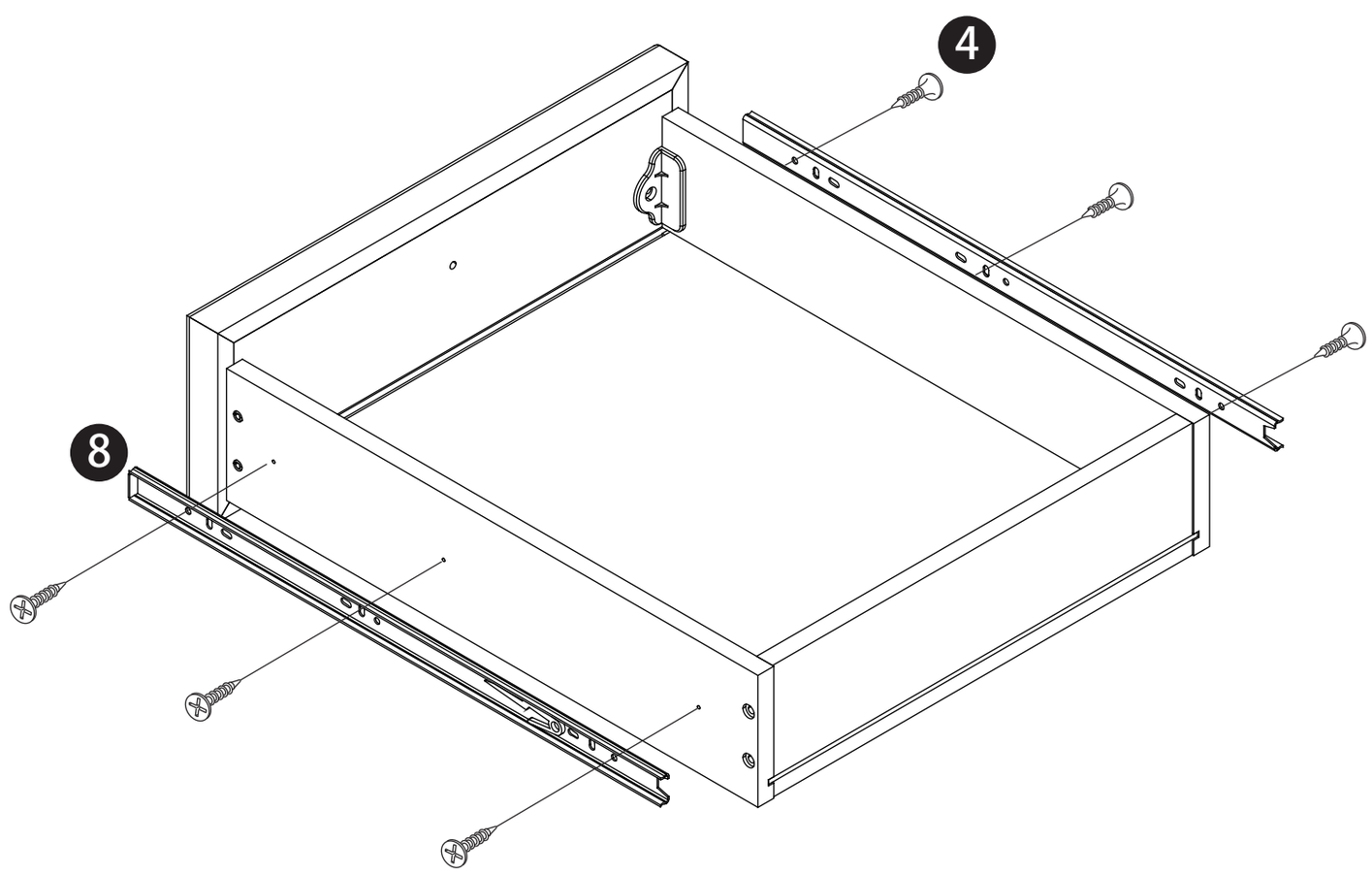


OUTPUT AT 82.69% OF ACTUAL SIZE

Job # / Name: 21167 Assembly Inst. Revision
File Name: 21167_RS_dsk_stp6.ai

Merchant: XXXXXXXXX

Source/Vendor: ODC / Li & Fung

Dieline Name: 8.5 x 11
☐ Vendor Supplied ☐ Created In-House

Package Type:
☐ Box ☐ Insert/J-Card ☐ Blister
☐ Label ☐ Poly Bag ☐ Hangtag
☐ Belly Band ☐ Clamshell
■ Other Book Template

Colors:
■ Black

Dieline Colors (Add addtl if necessary):
■ FPO Callout ■ FPO Dieline

Office DEPOT. Private Brand
6600 North Military Trail, Boca Raton, FL 33496

round 1 ☐ FINAL

| Round: | Date: | Artist Initials: |
|---|---|---|
| 1 | 05.05.11 | RC |
| 1b | 08.03.11 | rt |

Release Artist: XX
Original Release: XX.XX .11

| PACKAGING TEAM | INITIAL | DATE |
|---|---|---|
| Design Manager | | |
| Production Manager | | |
| Proofreader | | |
| Copywriter | | |
| Project Manager | | |

| MERCHANTS & QA | INITIAL | DATE |
|---|---|---|
| Merchant | | |
| Quality Assurance | | |
| Customer Service | | |

# 11

5 x 4

7 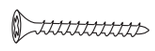 x 4

15 x 2

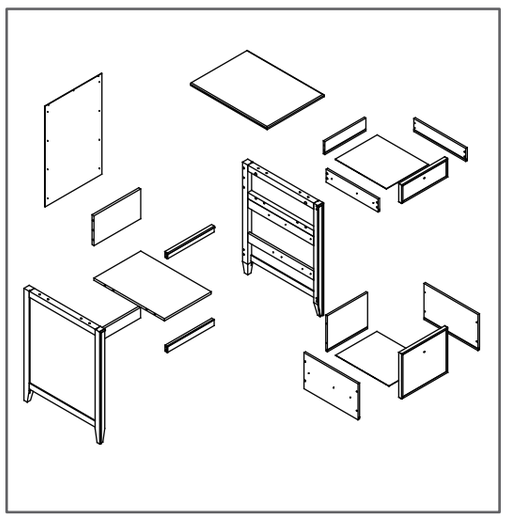

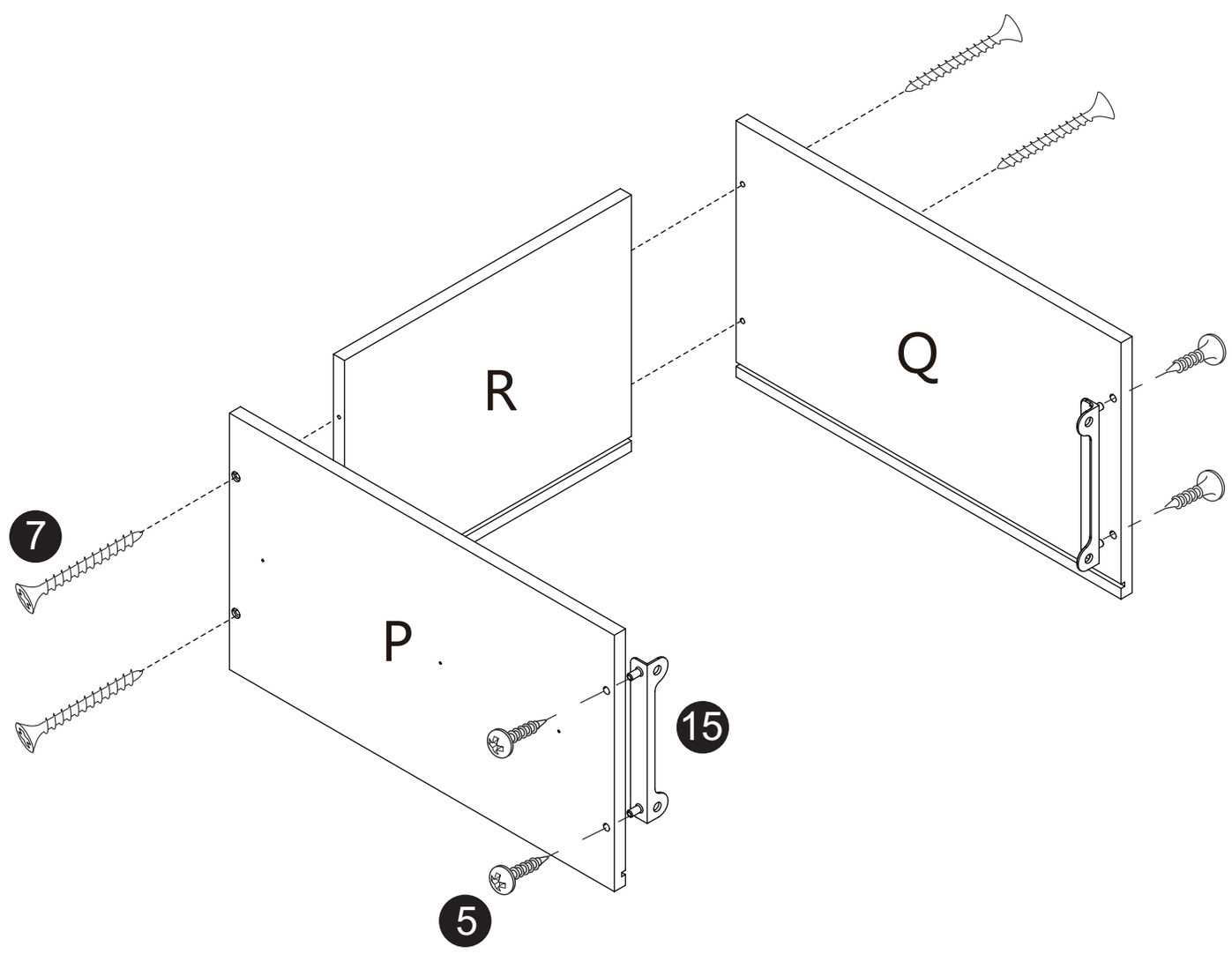


OUTPUT AT 82.69% OF ACTUAL SIZE

| | | |
|---|---|---|
| Job # / Name: 21167 Assembly Inst. Revision<br>File Name: 21167_RS_dsk_stp6.ai | | Round: 1, 1b<br>Date: 05.05.11, 08.03.11<br>Artist Initials: RC, rt |
| Merchant: XXXXXXXXX | Source/Vendor: ODC / Li & Fung | |
| Dieline Name: 8.5 x 11<br>☐ Vendor Supplied ☐ Created In-House<br>Package Type:<br>☐ Box ☐ Insert/J-Card ☐ Blister<br>☐ Label ☐ Poly Bag ☐ Hangtag<br>☐ Belly Band ☐ Clamshell<br>■ Other Book Template | Colors:<br>■ Black<br>Dieline Colors (Add addtl if necessary):<br>FPO Callout FPO Dieline | |
| Office DEPOT. Private Brand<br>6600 North Military Trail, Boca Raton, FL 33496 | round 1 ☐ FINAL | Release Artist: XX<br>Original Release: XX.XX.11 |

| PACKAGING TEAM | INITIAL | DATE |
|---|---|---|
| Design Manager | | |
| Production Manager | | |
| Proofreader | | |
| Copywriter | | |
| Project Manager | | |

| MERCHANTS & QA | INITIAL | DATE |
|---|---|---|
| Merchant | | |
| Quality Assurance | | |
| Customer Service | | |

# 12

| | | |
|---|---|---|
| 6 | | x 4 |
| 12 | | x 1 |
| 13 | | x 1 |
| 21 | | x 1 |

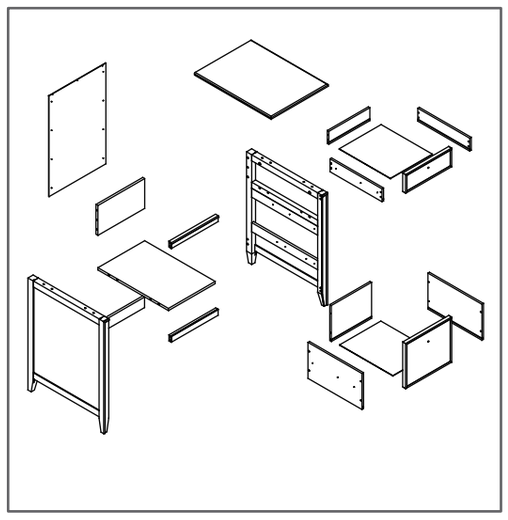

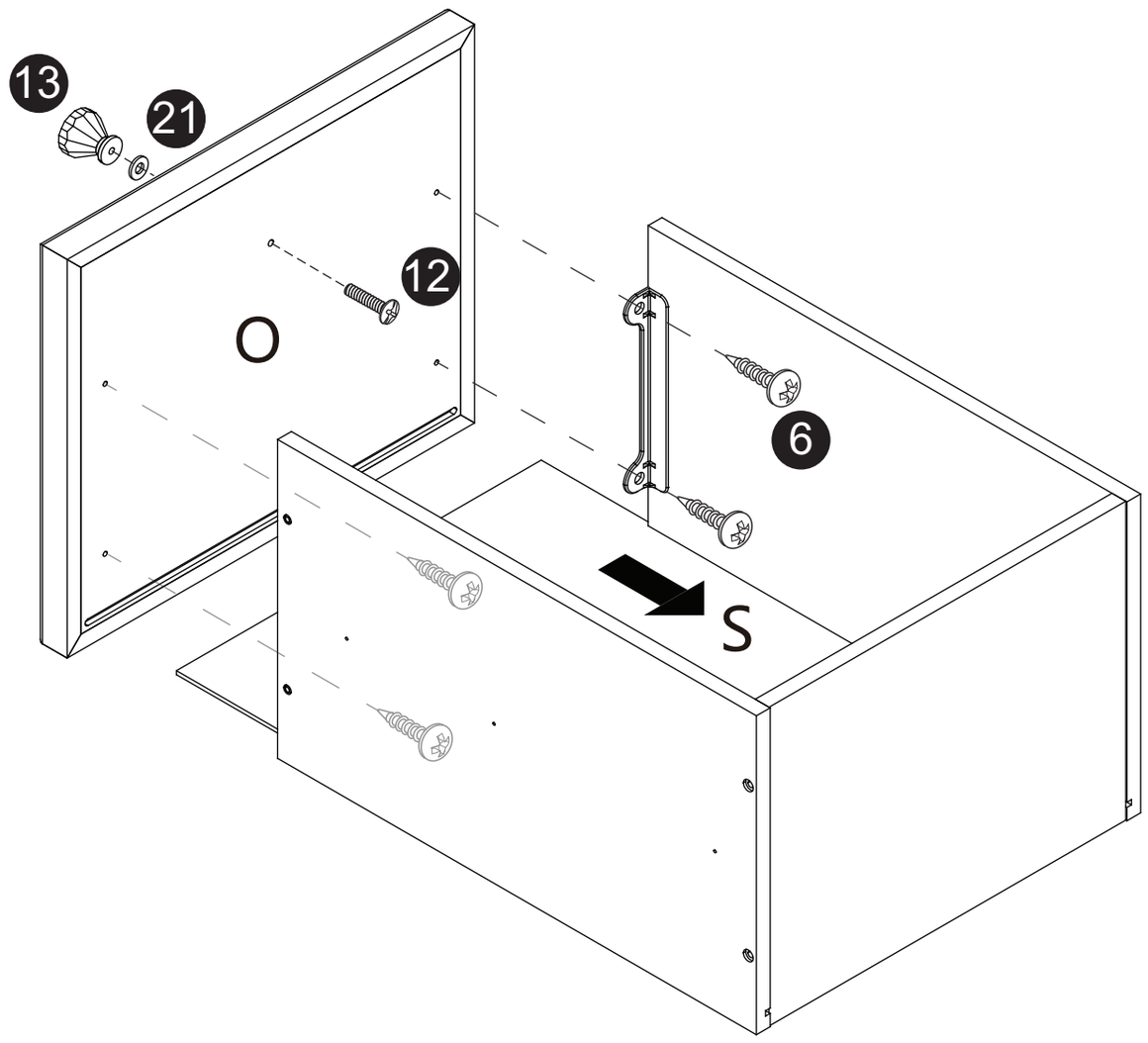


OUTPUT AT 82.69% OF ACTUAL SIZE

| | | |
|---|---|---|
| Job # / Name: 21167 Assembly Inst. Revision<br>File Name: 21167_RS_dsk_stp6.ai | | Round: 1 Date: 05.05.11 Artist Initials: RC<br>1b 08.03.11 rt |
| Merchant: XXXXXXXXX | Source/Vendor: ODC / Li & Fung | |
| Dieline Name: 8.5 x 11<br>☐ Vendor Supplied ☐ Created In-House<br>Package Type:<br>☐ Box ☐ Insert/J-Card ☐ Blister<br>☐ Label ☐ Poly Bag ☐ Hangtag<br>☐ Belly Band ☐ Clamshell<br>■ Other Book Template | Colors:<br>■ Black<br>Dieline Colors (Add addtl if necessary):<br>FPO Callout FPO Dieline | |
| Office DEPOT® Private Brand<br>6600 North Military Trail, Boca Raton, FL 33496 | round 1 ☐ FINAL | Release Artist: XX<br>Original Release: XX.XX.11 |

| PACKAGING TEAM | INITIAL | DATE |
|---|---|---|
| Design Manager | | |
| Production Manager | | |
| Proofreader | | |
| Copywriter | | |
| Project Manager | | |

| MERCHANTS & QA | INITIAL | DATE |
|---|---|---|
| Merchant | | |
| Quality Assurance | | |
| Customer Service | | |

# 13

4 x 6

10 x 2

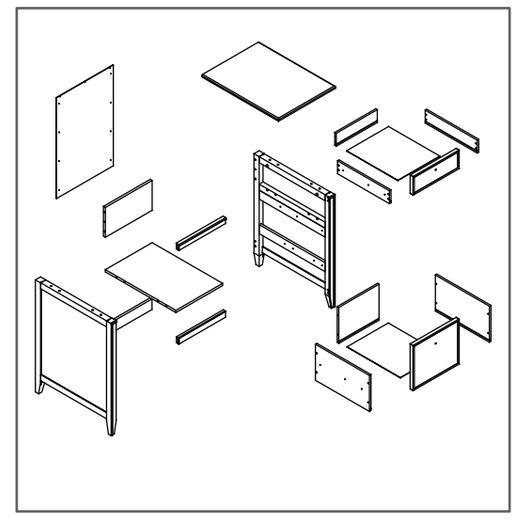

10

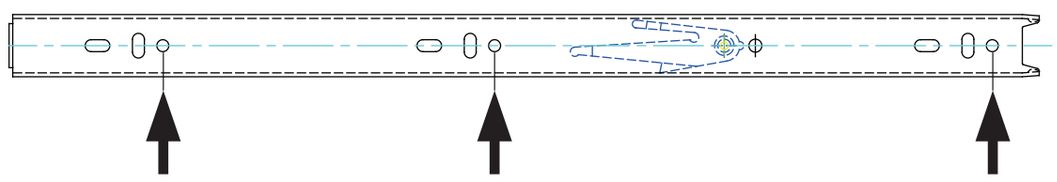

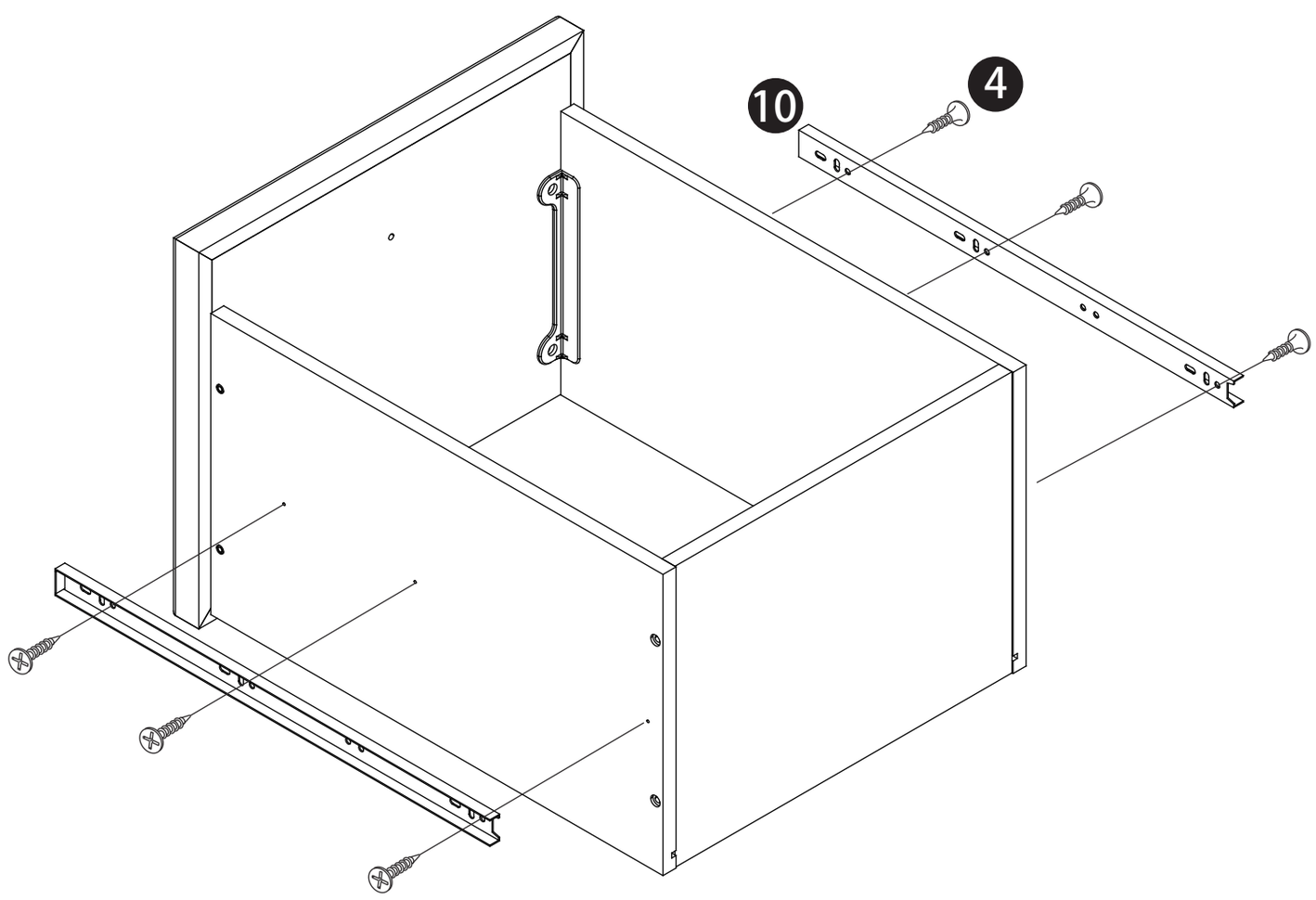


OUTPUT AT 82.69% OF ACTUAL SIZE

Job # / Name: 21167 Assembly Inst. Revision
File Name: 21167_RS_dsk_stp6.ai

Merchant: XXXXXXXXX
Source/Vendor: ODC / Li & Fung

Dieline Name: 8.5 x 11
☐ Vendor Supplied ☐ Created In-House

Package Type:
☐ Box ☐ Insert/J-Card ☐ Blister
☐ Label ☐ Poly Bag ☐ Hangtag
☐ Belly Band ☐ Clamshell
■ Other Book Template

Colors:
■ Black

Dieline Colors (Add addtl if necessary):
FPO Callout FPO Dieline

Office DEPOT. Private Brand
6600 North Military Trail, Boca Raton, FL 33496

round 1 ☐ FINAL

| Round: | Date: | Artist Initials: |
|---|---|---|
| 1 | 05.05.11 | RC |
| 1b | 08.03.11 | rt |

Release Artist: XX
Original Release: XX.XX .11

| PACKAGING TEAM | INITIAL | DATE |
|---|---|---|
| Design Manager | | |
| Production Manager | | |
| Proofreader | | |
| Copywriter | | |
| Project Manager | | |

| MERCHANTS & QA | INITIAL | DATE |
|---|---|---|
| Merchant | | |
| Quality Assurance | | |
| Customer Service | | |

# 14

19 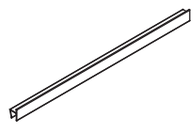 x 2

20 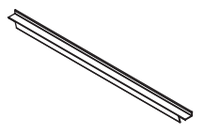 x 1

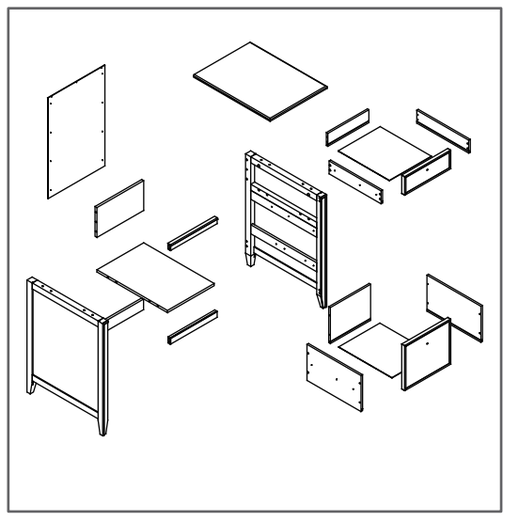

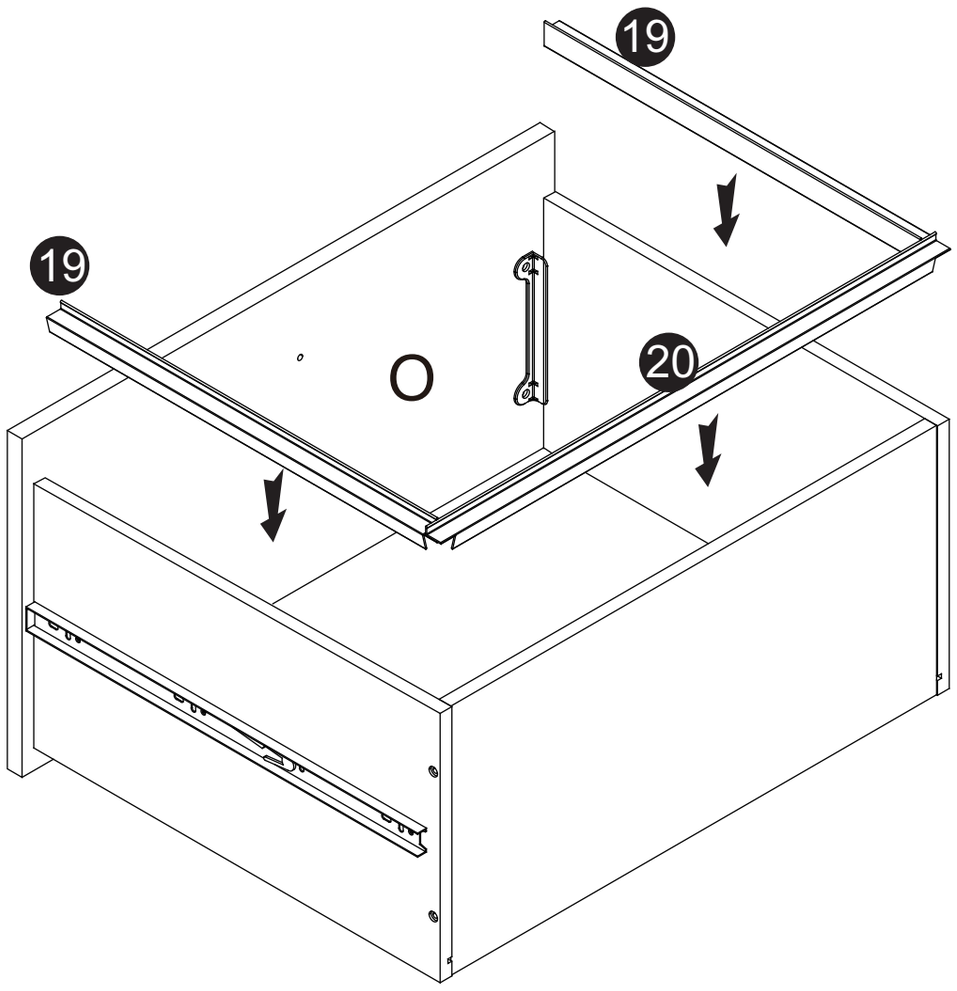


OUTPUT AT 82.69% OF ACTUAL SIZE

| | | |
|---|---|---|
| Job # / Name: 21167 Assembly Inst. Revision<br>File Name: 21167_RS_dsk_stp6.ai | | Round: 1 Date: 05.05.11 Artist Initials: RC<br>1b 08.03.11 rt |
| Merchant: XXXXXXXXX | Source/Vendor: ODC / Li & Fung | |
| Dieline Name: 8.5 x 11<br>☐ Vendor Supplied ☐ Created In-House<br>Package Type:<br>☐ Box ☐ Insert/J-Card ☐ Blister<br>☐ Label ☐ Poly Bag ☐ Hangtag<br>☐ Belly Band ☐ Clamshell<br>■ Other Book Template | Colors:<br>■ Black<br>Dieline Colors (Add addtl if necessary):<br>FPO Callout FPO Dieline | |
| Office DEPOT. Private Brand<br>6600 North Military Trail, Boca Raton, FL 33496 | round 1 ☐ FINAL | Release Artist: XX<br>Original Release: XX.XX.11 |

| PACKAGING TEAM | INITIAL | DATE |
|---|---|---|
| Design Manager | | |
| Production Manager | | |
| Proofreader | | |
| Copywriter | | |
| Project Manager | | |

| MERCHANTS & QA | INITIAL | DATE |
|---|---|---|
| Merchant | | |
| Quality Assurance | | |
| Customer Service | | |

# 15

16 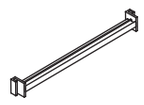 x1

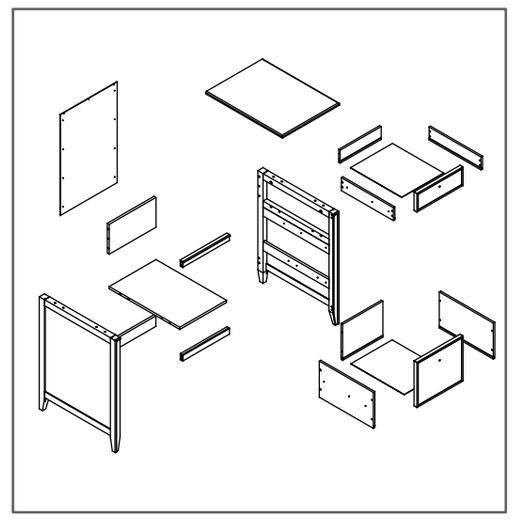

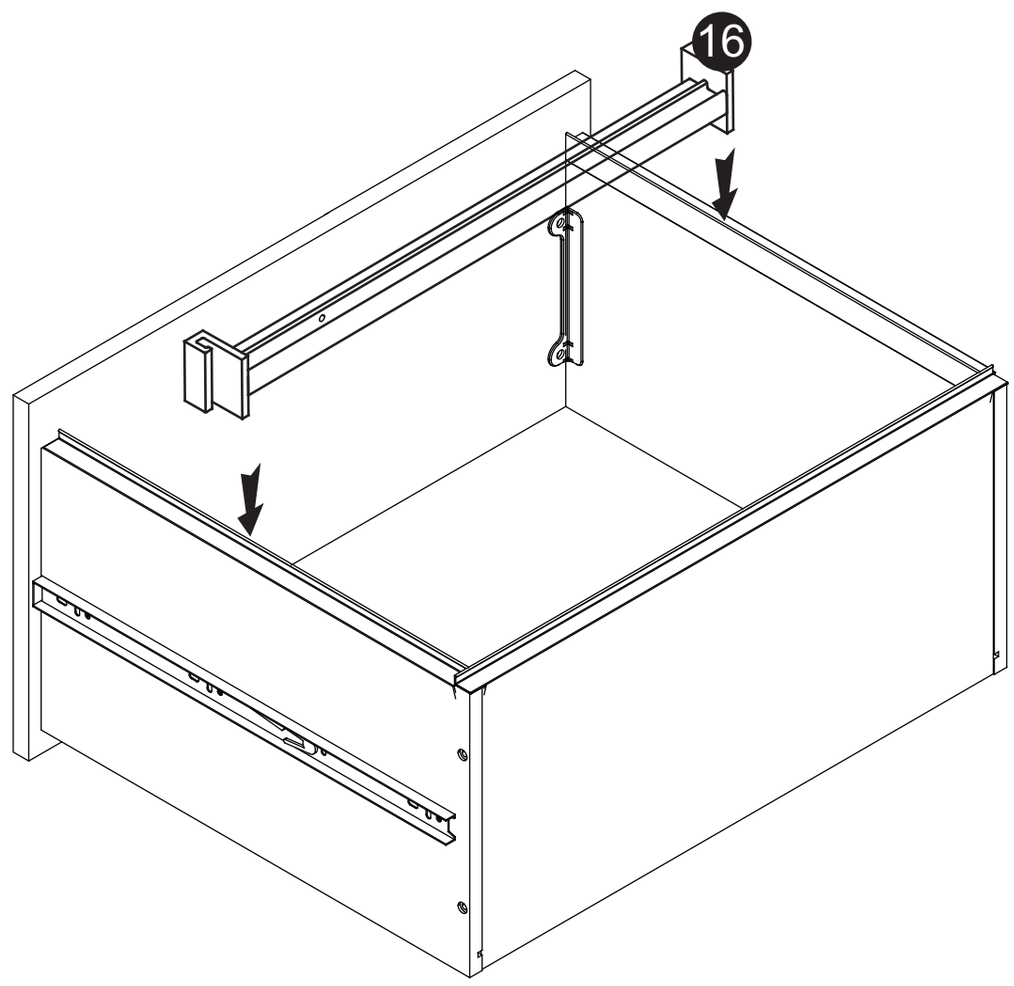


OUTPUT AT 82.69% OF ACTUAL SIZE

Job # / Name: 21167 Assembly Inst. Revision
File Name: 21167_RS_dsk_stp6.ai

Merchant: XXXXXXXXX

Source/Vendor: ODC / Li & Fung

Dieline Name: 8.5 x 11
☐ Vendor Supplied ☐ Created In-House

Package Type:
☐ Box ☐ Insert/J-Card ☐ Blister
☐ Label ☐ Poly Bag ☐ Hangtag
☐ Belly Band ☐ Clamshell
■ Other Book Template

Colors:
■ Black

Dieline Colors (Add addtl if necessary):
FPO Callout FPO Dieline

Office DEPOT. Private Brand
6600 North Military Trail, Boca Raton, FL 33496

round 1 ☐ FINAL

| Round: | Date: | Artist Initials: |
|---|---|---|
| 1 | 05.05.11 | RC |
| 1b | 08.03.11 | rt |

Release Artist: XX
Original Release: XX.XX.11

| PACKAGING TEAM | INITIAL | DATE |
|---|---|---|
| Design Manager | | |
| Production Manager | | |
| Proofreader | | |
| Copywriter | | |
| Project Manager | | |

| MERCHANTS & QA | INITIAL | DATE |
|---|---|---|
| Merchant | | |
| Quality Assurance | | |
| Customer Service | | |

# 16

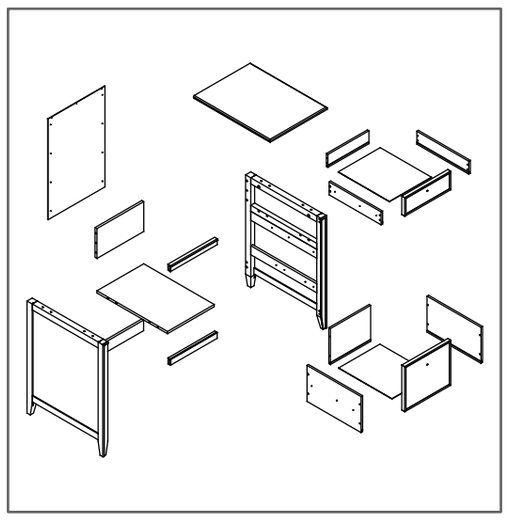

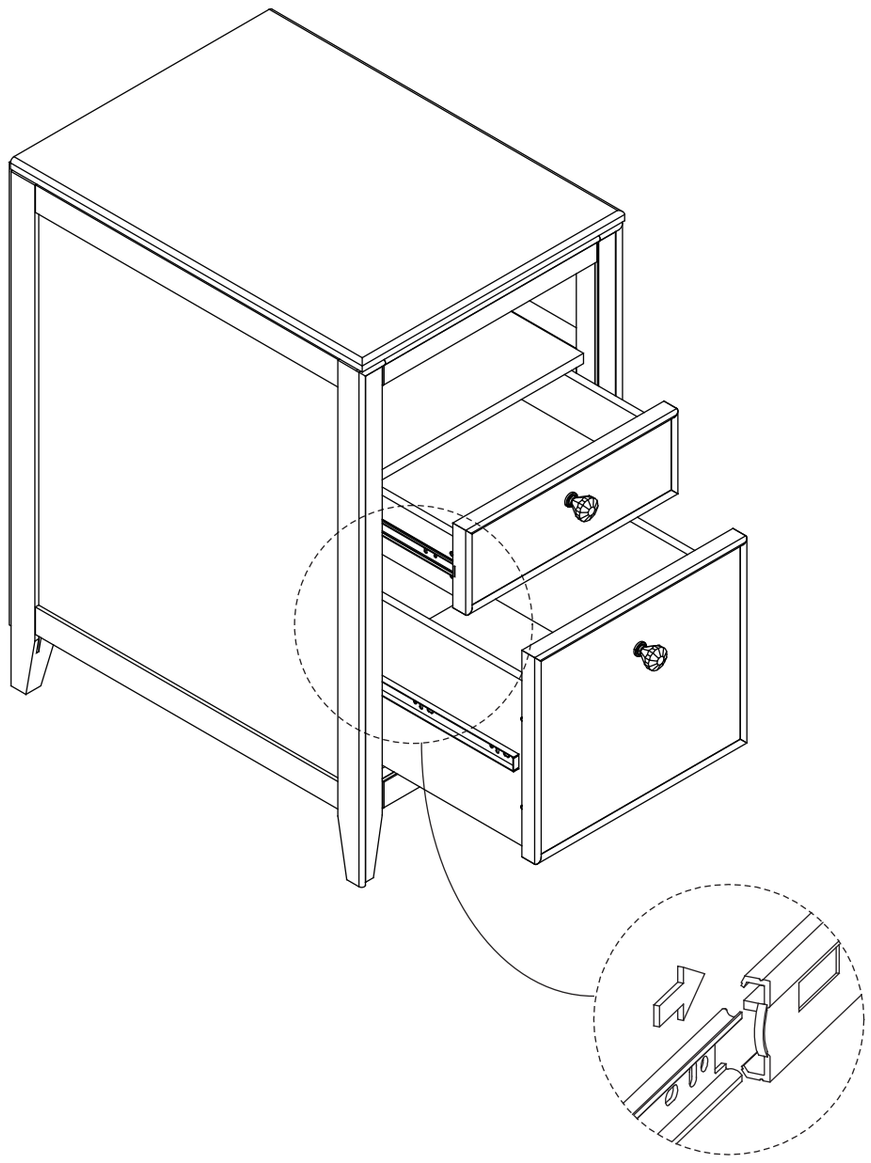

OUTPUT AT 82.69% OF ACTUAL SIZE

Job # / Name: 21167 Assembly Inst. Revision
File Name: 21167_RS_dsk_stp6.ai

Merchant: XXXXXXXXX
Source/Vendor: ODC / Li & Fung

Dieline Name: 8.5 x 11
☐ Vendor Supplied ☐ Created In-House

Package Type:
☐ Box ☐ Insert/J-Card ☐ Blister
☐ Label ☐ Poly Bag ☐ Hangtag
☐ Belly Band ☐ Clamshell
■ Other Book Template

Colors:
■ Black

Dieline Colors (Add addtl if necessary):
■ FPO Callout ■ FPO Dieline

Office DEPOT® Private Brand
6600 North Military Trail, Boca Raton, FL 33496

round 1 ☐ FINAL

| Round: | Date: | Artist Initials: |
|---|---|---|
| 1 | 05.05.11 | RC |
| 1b | 08.03.11 | rt |

Release Artist: XX
Original Release: XX.XX.11

| PACKAGING TEAM | INITIAL | DATE |
|---|---|---|
| Design Manager | | |
| Production Manager | | |
| Proofreader | | |
| Copywriter | | |
| Project Manager | | |

| MERCHANTS & QA | INITIAL | DATE |
|---|---|---|
| Merchant | | |
| Quality Assurance | | |
| Customer Service | | |

8.5”

11”

**Swinton Avenue Trading Ltd., Inc. Limited Five Year Product Warranty**

This limited warranty covers the original purchase of new product used for normal commercial, personal or household use. Swinton Avenue Trading, Inc. (SAT) warrants its products will be free from defects in materials and workmanship (normal wear and tear excepted), for five (5) years from the date of purchase, except as provided below. SAT, at its option, will replace with a comparable product, free of charge, any product purchased from it that fails under normal use as a result of such defect. This warranty does not apply to damage caused by fire, accident, negligence, misuse, use other than as stated in product instructions, improper cleaning or other circumstances not directly attributable to defects in materials and workmanship.

**Natural variations occurring in wood or other materials will not be considered defects, and SAT does not warrant the color-fastness or matching of colors, grains, or textures of such materials. This warranty does not apply to: modifications of the product, attachments to the product not approved by SAT, and products that were not installed, used, or maintained in accordance with product instructions and warnings.**

**This warranty has the following exceptions: Fabrics, foam, veneer finishes and other covering materials are warranted for three years from date of purchase.**

Proof of purchase is required in the form of a receipt (copy or original) to validate warranty. If you do not have a copy of your store receipt and paid using a check or a major credit card, a copy can be obtained from Office Depot’s receipt retrieval department at 1-800-721-6592.

If Swinton Avenue Trading, Inc. chooses to provide a refund for such product, it will be fulfilled in the form of an Office Depot Merchandise card. Claims fulfilled in this manner take approximately 30 days to process.

SAT PROVIDES THIS LIMITED WARRANTY IN LIEU OF ALL OTHER WARRANTIES EITHER EXPRESSED OR IMPLIED. EXPRESSLY EXCLUDED ARE ALL WARRANTIES OF FITNESS FOR A PARTICULAR PURPOSE OR MERCHANTABILITY. OFFICE DEPOT’S SOLE OBLIGATION AND THE USER’S EXCLUSIVE REMEDY UNDER THIS WARRANTY SHALL BE LIMITED TO THE REPAIR, REFUND (IN THE FORM OF AN OFFICE DEPOT MERCHANDISE CARD) OR REPLACEMENT AT SAT’S SOLE DISCRETION AND COST, OF PRODUCT OR COMPONENTS.

IN NO EVENT SHALL SAT, ITS AFFILIATES, SUBSIDIARIES OR PARENT COMPANIES BE RESPONSIBLE FOR CONSEQUENTIAL, SPECIAL, OR INCIDENTAL DAMAGES ARISING OUT OF A CLAIM OF DEFECTIVE PRODUCT EVEN IF SAT HAS BEEN ADVISED OF THE POSSIBILITY OF SUCH DAMAGES.

SOME STATES OR PROVINCES DO NOT ALLOW THE EXCLUSION OF IMPLIED WARRANTIES OR LIMITATIONS ON HOW LONG AN IMPLIED WARRANTY LASTS OR THE EXCLUSION OR LIMITATION OF INCIDENTIAL OR CONSEQUENTIAL DAMAGES SO THE ABOVE LIMITATIONS MAY NOT APPLY TO YOU. THIS WARRANTY GIVES YOU SPECIFIC LEGAL RIGHTS, AND YOU MAY ALSO HAVE OTHER RIGHTS WHICH MAY VARY BY STATE OR PROVINCE.

THIS WARRANTY APPLIES ONLY TO THE U.S. AND CANADA.

**Service Instructions**
Please call: 1-800-949-9974 for warranty service.

OUTPUT AT 82.69% OF ACTUAL SIZE

Job # / Name: 21167 Assembly Instruction Revision
File Name: 21167_RS_dsk_warr_eng.ai

Merchant: XXXXXXXXX
Source/Vendor: ODC / Li & Fung

Dieline Name: 8.5 x 11
☐ Vendor Supplied ☐ Created In-House

Package Type:
☐ Box ☐ Insert/J-Card ☐ Blister
☐ Label ☐ Poly Bag ☐ Hangtag
☐ Belly Band ☐ Clamshell
■ Other Book Template

Colors:
■ Black

Dieline Colors (Add addtl if necessary):
FPO Callout FPO Dieline

| Round: | Date: | Artist Initials: |
|---|---|---|
| 1 | 05.05.11 | RC |
| 1b | 08.03.11 | rt |
| 1c | 08.16.11 | rt |

Office DEPOT. Private Brand
6600 North Military Trail, Boca Raton, FL 33496

round 1 ☐ FINAL

Release Artist: XX
Original Release: XX.XX.11

| PACKAGING TEAM | INITIAL | DATE |
|---|---|---|
| Design Manager | | |
| Production Manager | | |
| Proofreader | | |
| Copywriter | | |
| Project Manager | | |

| MERCHANTS & QA | INITIAL | DATE |
|---|---|---|
| Merchant | | |
| Quality Assurance | | |
| Customer Service | | |

8.5”

11”

**Swinton Avenue Trading Ltd., Inc. Garantie limitée de cinq (5) ans**

Cette garantie limitée couvre les produits neufs utilisés dans le cadre d'applications commerciales ou domestiques normales. Swinton Avenue Trading, Inc. (SAT) garantit ses produits contre les défauts de matériel et de main-d'oeuvre (à l'exception de l'usure normale) durant cinq (5) ans à compter de la date d'achat, à l'exception des conditions ci-dessous. SAT, à son gré, remplacera sans frais tout produit défectueux dans des conditions d'usure normale par un produit comparable. La présente garantie ne s'applique pas aux dommages causés par le feu, un accident, la négligence, l'usage abusif, le non-respect des instructions, un nettoyage inapproprié ou autre circonstance non directement attribuable à des défauts de matériel et de main-d'oeuvre.

**Les variations naturelles du bois et des autres matériaux utilisés ne sont pas considérées comme des défauts, et SAT ne garantit pas les couleurs, les grains et les textures de ces matériaux. La présente garantie ne s'applique pas aux produits modifiés, aux fixations non approuvées par SAT et aux produits n'ayant pas été installés, utilisés et entretenus conformément aux instructions et aux avertissements fournis avec le produit.**

**Les tissus, la mousse, les placages et les autres matériaux de recouvrement sont garantis pendant trois (3) ans à compter de la date d'achat.**

Le reçu d'origine ou une copie est nécessaire pour valider la garantie. Si vous avez payé par chèque ou carte de crédit, vous pouvez obtenir une copie de reçu auprès de Office Depot en composant le 1-800-721-6592.

Si Swinton Avenue Trading Inc. décide de rembourser le prix d'achat d'un tel produit, le remboursement sera offert sous forme de carte d'achat Office Depot. Veuillez allouer 30 jours pour le traitement des réclamations.

CETTE GARANTIE EST FOURNIE EN LIEU ET PLACE DE TOUTE AUTRE GARANTIE. SONT EXCLUES TOUTES LES GARANTIES D'ADÉQUATION À UN USAGE SPÉCIFIQUE ET DE QUALITÉ SATISFAISANTE. LA SEULE OBLIGATION D'SAT ET VOTRE SEUL RECOURS EN VERTU DE CETTE GARANTIE SONT LIMITÉS À LA RÉPARATION DU PRODUIT, AU REMBOURSEMENT SOUS FORME DE CARTE D'ACHAT OFFICE DEPOT OU AU REMPLACEMENT DU PRODUIT OU DE COMPOSANTS À SES FRAIS.

SAT, SES FILIALES, SES COMPAGNIES ASSOCIÉES ET SES SOCIÉTÉS MÈRES NE PEUVENT ÊTRE TENUES RESPONSABLES DES DOMMAGES INDIRECTS OU PARTICULIERS INHÉRENTS À UNE RÉCLAMATION POUR PRODUIT DÉFECTUEUX MÊME SI LA POSSIBILITÉ D'UN TEL DOMMAGE A ÉTÉ DÉJÀ ÉTÉ PORTÉE À LA CONNAISSANCE D'SAT.

CERTAINS ÉTATS ET CERTAINES PROVINCES INTERDISANT L'EXCLUSION OU LES RESTRICTIONS DE DURÉE DES GARANTIES IMPLICITES OU L'EXCLUSION DES DOMMAGES INDIRECTS, LES RESTRICTIONS CI-DESSUS PEUVENT NE PAS S'APPLIQUER À VOUS. LA PRÉSENTE GARANTIE VOUS CONFÈRE DES DROITS JURIDIQUES SPÉCIFIQUES ET VOUS POUVEZ DISPOSER D'AUTRES DROITS, LESQUELS PEUVENT VARIER SELON L'ÉTAT OU LA PROVINCE.

CETTE GARANTIE S'APPLIQUE UNIQUEMENT AU CANADA ET AUX ÉTATS-UNIS.

**Procédure de réclamation en vertu de la garantie**
Pour faire une réclamation, composez le 1 800 949-9974.

OUTPUT AT 82.69% OF ACTUAL SIZE

Job # / Name: 21167 Assembly Instruction Revision
File Name: 21167_RS_dsk_warr_fr.ai

Merchant: XXXXXXXXX
Source/Vendor: ODC / Li & Fung

Dieline Name: 8.5 x 11
☐ Vendor Supplied ☐ Created In-House

Package Type:
☐ Box ☐ Insert/J-Card ☐ Blister
☐ Label ☐ Poly Bag ☐ Hangtag
☐ Belly Band ☐ Clamshell
■ Other Book Template

Colors:
■ Black

Dieline Colors (Add addtl if necessary):
FPO Callout FPO Dieline

Office DEPOT. Private Brand
6600 North Military Trail, Boca Raton, FL 33496

round 1 ☐ FINAL

| Round: | Date: | Artist Initials: |
|---|---|---|
| 1 | 05.05.11 | RC |
| 1b | 08.03.11 | rt |
| 1c | 08.16.11 | rt |

Release Artist: XX
Original Release: XX.XX.11

| PACKAGING TEAM | INITIAL | DATE |
|---|---|---|
| Design Manager | | |
| Production Manager | | |
| Proofreader | | |
| Copywriter | | |
| Project Manager | | |

| MERCHANTS & QA | INITIAL | DATE |
|---|---|---|
| Merchant | | |
| Quality Assurance | | |
| Customer Service | | |

8.5”

11”

**Swinton Avenue Trading Ltd., Inc. Garantía limitada de cinco años para el producto**

Esta garantía limitada cubre la adquisición original de un producto nuevo utilizado con fines comerciales, personales o domésticos normales. Swinton Avenue Trading, Inc. (SAT) garantiza que sus productos estarán exentos de defectos materiales y de fabricación (a excepción de los derivados de un uso y desgaste normal) durante cinco (5) años a partir de la fecha de compra del producto, con la salvedad de lo dispuesto a continuación. SAT, a su discreción, sustituirá de forma gratuita por un producto de características similares cualquier producto adquirido que no soporte unas condiciones de uso normales como consecuencia de dicho defecto. Esta garantía no se aplica a daños causados por incendio, accidente, negligencia, uso incorrecto o cualquier otro uso no especificado en las instrucciones del producto, así como a daños causados por una limpieza incorrecta o por otras circunstancias no atribuibles de forma directa a defectos en los materiales y la fabricación.

**Los cambios atribuibles a la propia naturaleza de la madera u otros materiales no se considerarán defectos y SAT no garantiza la resistencia del color o la coincidencia del color, el veteado o la textura de dichos materiales. Esta garantía no se aplica a: modificaciones del producto, accesorios del producto no aprobados por SAT y productos no instalados, utilizados o mantenidos de acuerdo a las instrucciones y advertencias del producto.**

**Esta garantía cuenta con las siguientes excepciones: el tejido, la espuma, el acabado de chapa y el resto de materiales de revestimiento tienen una garantía de tres años a partir de la fecha de compra**.

Es necesario presentar el recibo (copia u original) como prueba de compra para validar la garantía. Si no tiene una copia del recibo de la tienda y realizó el pago mediante cheque o tarjeta de crédito, puede conseguir una copia a través del departamento de recuperación de recibos de Office Depot en el teléfono 1-800-721-6592.

En el caso de que Swinton Avenue Trading, Inc. decida reembolsar dicho producto, este reembolso se realizará mediante una tarjeta comercial de Office Depot. Las reclamaciones realizadas a través de este método se procesarán en aproximadamente 30 días.

ESTA GARANTÍA LIMITADA DE SAT SUSTITUYE A TODAS LAS DEMÁS GARANTÍAS, YA SEAN EXPLÍCITAS O IMPLÍCITAS. QUEDAN EXPRESAMENTE EXCLUIDAS TODAS LAS GARANTÍAS DE ADECUACIÓN PARA UN DETERMINADO FIN O COMERCIABILIDAD. LA ÚNICA OBLIGACIÓN DE SAT Y EL ÚNICO RECURSO DEL USUARIO EN VIRTUD DE ESTA GARANTÍA CONSISTIRÁ EN LA REPARACIÓN, REEMBOLSO (MEDIANTE UNA TARJETA COMERCIAL DE OFFICE DEPOT) O SUSTITUCIÓN, SEGÚN ESTIME OPORTUNO ODP Y ASUMIENDO TODOS LOS COSTES, DEL PRODUCTO O SUS COMPONENTES.

EN NINGÚN CASO SAT, SUS AFILIADOS, SUBSIDIARIOS O EMPRESAS MATRICES SERÁN RESPONSABLES DE DAÑOS DERIVADOS, ESPECIALES O NO INTENCIONADOS PROCEDENTES DE UNA RECLAMACIÓN POR UN PRODUCTO DEFECTUOSO, AUNQUE SE HAYA ADVERTIDO A SAT DE LA POSIBILIDAD DE TALES DAÑOS.

ALGUNAS ESTADOS O PROVINCIAS NO PERMITEN LA EXCLUSIÓN DE GARANTÍAS IMPLÍCITAS, LAS LIMITACIONES SOBRE LA DURACIÓN DE UNA GARANTÍA IMPLÍCITA O LA EXCLUSIÓN O LIMITACIÓN DE DAÑOS DERIVADOS O NO INTENCIONADOS, POR LO QUE ES POSIBLE QUE LAS LIMITACIONES MENCIONADAS NO SE APLIQUEN EN SU CASO. ESTA GARANTÍA OTORGA AL USUARIO DERECHOS
LEGALES ESPECÍFICOS; ADEMÁS, ES POSIBLE QUE GOCE DE OTROS DERECHOS QUE VARÍAN SEGÚN EL ESTADO O LA PROVINCIA.

ESTA GARANTÍA SE APLICA SÓLO EN EE. UU. Y CANADÁ.

**Instrucciones de servicio**
Llame al 1-800-949-9974 para obtener más información sobre el servicio de garantía.

OUTPUT AT 82.69% OF ACTUAL SIZE

Job # / Name: Assembly Instruction Revision
File Name: 21167_RS_dsk_warr_sp.ai
Merchant: XXXXXXXXX
Source/Vendor: ODC / Li & Fung
Dieline Name: 8.5 x 11
☐ Vendor Supplied ☐ Created In-House
Package Type:
☐ Box ☐ Insert/J-Card ☐ Blister
☐ Label ☐ Poly Bag ☐ Hangtag
☐ Belly Band ☐ Clamshell
■ Other Book Template
Colors:
■ Black
Dieline Colors (Add addtl if necessary):
FPO Callout FPO Dieline

| Round: | Date: | Artist Initials: |
|---|---|---|
| 1 | 05.05.11 | RC |
| 1b | 08.03.11 | rt |
| 1c | 08.15.11 | rt |

Office DEPOT. Private Brand
6600 North Military Trail, Boca Raton, FL 33496
round 1
☐ FINAL
Release Artist: XX
Original Release: XX.XX.11

| PACKAGING TEAM | INITIAL | DATE |
|---|---|---|
| Design Manager | | |
| Production Manager | | |
| Proofreader | | |
| Copywriter | | |
| Project Manager | | |

| MERCHANTS & QA | INITIAL | DATE |
|---|---|---|
| Merchant | | |
| Quality Assurance | | |
| Customer Service | | |