Swinton Avenue Trading, Inc.
Limited Lifetime Product Warranty

This limited warranty covers the original purchase of new product used for normal commercial, personal or household use. Swinton Avenue Trading, Inc. (SAT) warrants its products will be free from defects in materials and workmanship (normal wear and tear excepted), as long as you own the product, except as provided below. SAT, at its option, will replace with a comparable product, free of charge, any product purchased from it that fails under normal use as a result of such defect. This warranty does not apply to damage caused by fire, accident, negligence, misuse, use other than as stated in product instructions, improper cleaning or other circumstances not directly attributable to defects in materials and workmanship.

Natural variations occurring in wood or other materials will not be considered defects, and SAT does not warrant the color-fastness or matching of colors, grains, or textures of such materials. This warranty does not apply to: modifications of the product, attachments to the product not approved by SAT, and products that were not installed, used, or maintained in accordance with product instructions and warnings.

This warranty has the following exceptions: Fabrics, foam, veneer finishes and other covering materials are warranted for Five years from date of purchase.

Proof of purchase is required in the form of a receipt (copy or original) to validate warranty. If you do not have a copy of your store receipt and paid using a check or a major credit card, a copy can be obtained from Office Depot's receipt retrieval department at 1-800-721-6592.

If Swinton Avenue Trading chooses to provide a refund for such product, it will be fulfilled in the form of an Office Depot Merchandise card. Claims fulfilled in this manner take approximately 30 days to process.

SAT PROVIDES THIS LIMITED WARRANTY IN LIEU OF ALL OTHER WARRANTIES EITHER EXPRESS OR IMPLIED. EXPRESSLY EXCLUDED ARE ALL WARRANTIES OF FITNESS FOR A PARTICULAR PURPOSE OR MERCHANTABILITY. ODP'S SOLE OBLIGATION AND THE USER'S EXCLUSIVE REMEDY UNDER THIS WARRANTY SHALL BE LIMITED TO THE REPAIR, REFUND (IN THE FORM OF AN OFFICE DEPOT MERCHANDISE CARD) OR REPLACEMENT AT SAT'S SOLE DISCRETION AND COST, OF PRODUCT OR COMPONENTS.

IN NO EVENT SHALL SAT, ITS AFFILIATES, SUBSIDIARIES OR PARENT COMPANIES BE RESPONSIBLE FOR CONSEQUENTIAL, SPECIAL, OR INCIDENTAL DAMAGES ARISING OUT OF A CLAIM OF DEFECTIVE PRODUCT EVEN IF ODP HAS BEEN ADVISED OF THE POSSIBILITY OF SUCH DAMAGES.

SOME STATES OR PROVINCES DO NOT ALLOW THE EXCLUSION OF IMPLIED WARRANTIES OR LIMITATIONS ON HOW LONG AN IMPLIED WARRANTY LASTS OR THE EXCLUSION OR LIMITATION OF INCIDENTIAL OR CONSEQUENTIAL DAMAGES SO THE ABOVE LIMITATIONS MAY NOT APPLY TO YOU. THIS WARRANTY GIVES YOU SPECIFIC LEGAL RIGHTS, AND YOU MAY ALSO HAVE OTHER RIGHTS WHICH MAY VARY BY STATE OR PROVINCE.

THIS WARRANTY APPLIES ONLY TO THE U.S. AND CANADA.

Service Instructions
Please call 1-800-949-9974 for warranty service.

WorkPro is a registered trademark of OMX, Inc
© 2016 Office Depot, Inc. All Rights Reserved.
If you have any questions, please call 800-949-9974.
Distributed by / Distribué par:
Swinton Avenue Trading Ltd., Inc.
6600 North Military Trail, Boca Raton, FL 33496 USA
Made In China / Fabriqué En Chine

WORKPRO®

FLEX
COLLECTION

SILVER STEEL LOCKING-CASTER LEG SET

ACIER ARGENTÉ
ENSEMBLE DE PIEDS AVEC ROULETTES À BLOCAGE

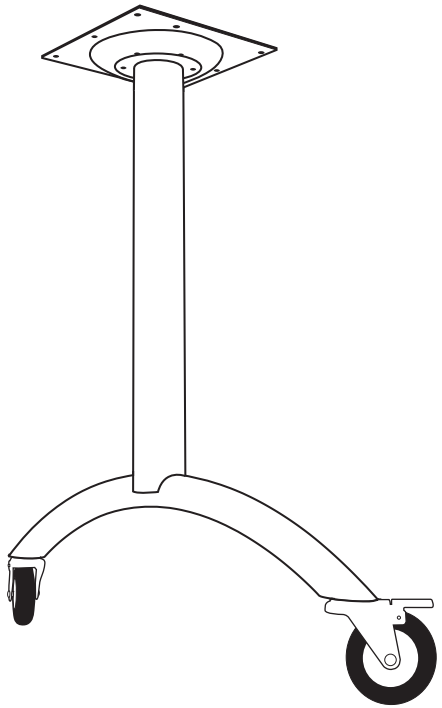

Assembly instructions and warranty information

Instructions pour l'assemblage et information sur la garantie

812-388
25326317
version 0316

Required tools
Outils requis

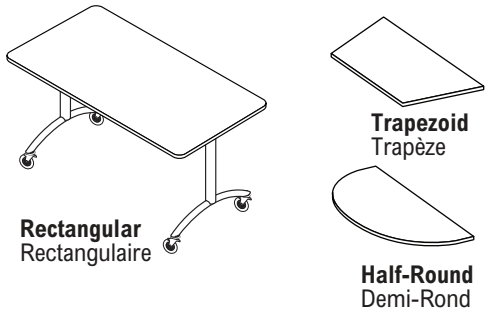

A Table Top (1X) / Dessus de table (1X)
B T-Leg (2X) / Pied en T (2X)
C Mounting Plate (2X) / Plaque de montage (2X)
D Machine Screw (26X) / Vis à métaux (26X)
E Caster (2X) / Roulette (2X)
F Caster w/Brake (2X) / Roulette avec frein (2X)
G Wrench (1X) / Clé (1X)

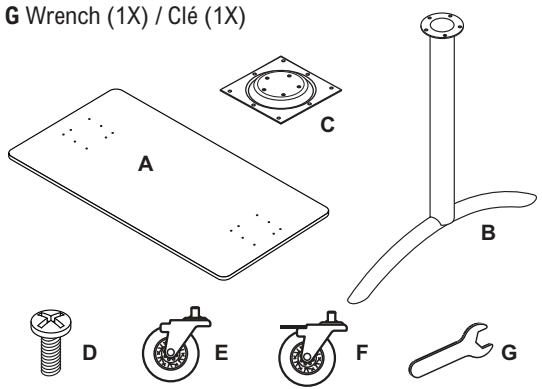

1 Attach mounting plates to underside of table
Attachez les plaques de montage sur le dessous de la table

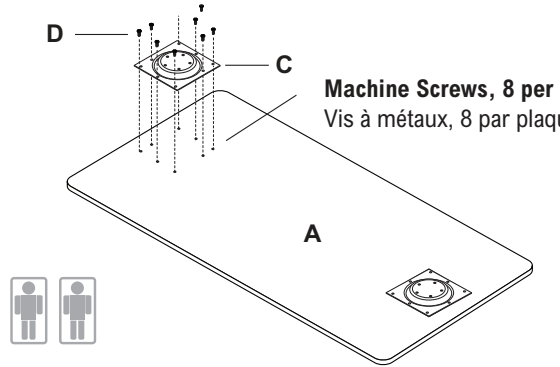

CAUTION! / MISE EN GARDE!

Set tabletop upside down on protected surface
Placez le dessus de table sens dessus dessous sur une surface protégée

2 Attach legs with machine screws
Attachez les pieds avec les vis à métaux

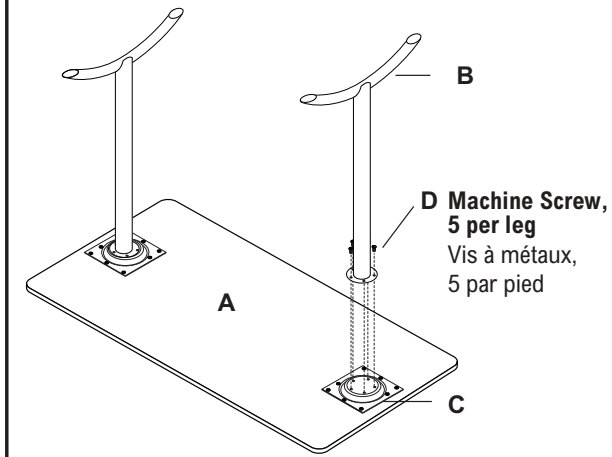

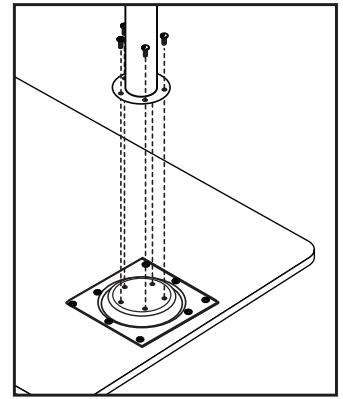

3 Attach (1X) locking caster and (1X) non-locking caster per leg
Attachez (1X) roulette verrouillable et (1X) roulette non verrouillable sur chaque pied.

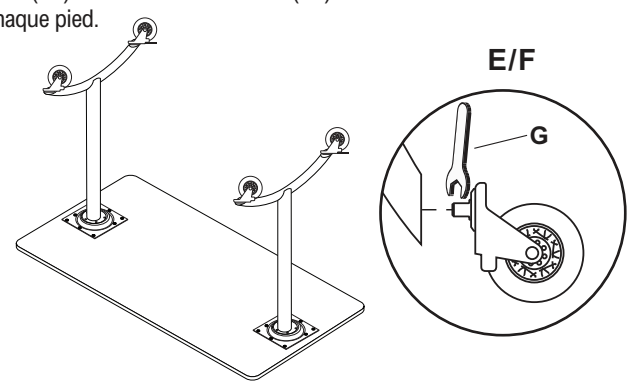

4 Set table upright
Mettez la table en position verticale

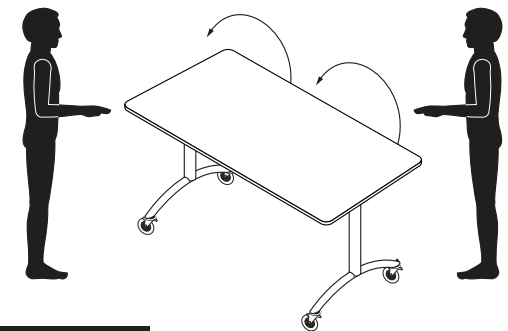

CAUTION! / MISE EN GARDE!

2 persons required to flip table over
2 personnes sont requises pour renverser la table

Limited Lifetime Warranty **Supports up to 500 lbs, evenly distributed across table top** / Garantie limitée à vie Supporte jusqu'à 225 kg répartis uniformément sur le dessus de la table.